RC 3510 – FH

... more than standard

H.264 Outdoor Dome IP Camera Included Fan and Heater

High quality Outdoor Dome IP H.264 camera with fan and heater included. The camera contains high quality CCD sensor for low light condition and includes Video Analytic solution as a standard feature

- Embedded Intelligent Video Analytics
- H.264 25/30 FPS@D1, 2-way Audio
- Video Compression: H.264, MPEG-4, MJPEG, Dual Stream
- Enhanced Deinterlacing on DSP,
- MicroSD Memory Support
- Burnt-in Text, Video Motion Detection Support
- Included fan and heater, IP66 Support
- Comprehensive SDK Support

Video Analytics included

Specifications

Camera Module	
Image Sensor	Sony 1/3" SONY Super HAD CCD
Effective Pixels	768 x 494 (NTSC) / 752 x 582 (PAL)
Scanning System	2:1 Interlace
Horizontal Resolution	540 TVL (Min.)
S/N Ratio	52dB (AGC Off)
Minimum Illumination	0.3 Lux (50 IRE, AGC HIGH, DNR HIGH) 0.002 Lux (Sens-up X 128)
Lens	2.8~10.5 mm F1.2 DC Auto Iris Board Vari-Focal
Day & Night	S/W (RC3510-1111) IR Cut Filter Remove (RC3510-1211/RC3510-2211)
Video	
Compression Format	H.264, MPEG-4, MJPEG
Number of Streams	Dual Stream, Configurable
Resolution	D1, 4CIF, 2CIF, VGA, QVGA, CIF, QCIF
Frame Rate	25/30 fps@D1
De-interlacing	Optional (On / Off)
Motion Detection	Built-in (DSP)
Burnt-in Text (Digital)	Video stream overlay text (DSP)
Analog Output	1 Loop Out, Molex Connector Inside
Audio	
Input	1 channel
Output	1 channel
Compression Format	G.711
Function	
Digital Input	1
Digital Output	1
Network	10 / 100 Base-T
Protocol	TCP/IP, UDP/IP, HTTP, RTSP, RTCP, RTP/UDP, RTP/TCP, SNTP, mDNS, UPnP, SMTP, SOCK, IGMP, DHCP, FTP, DDNS, SSL v2/v3, IEEE 802.1X, SSH, SNMP v2/v3
SD Memory Card Slot	Optional, microSD up to 8GB

Electrical	
Power Source	12V DC
Power over Ethernet	Support (IEEE 802.3af Heater doesn't use POE)
Power Consumption (Approx)	1650 mA @ +12V DC
Environmental	
Operating Temperature Fan Fan & Heater	 -10℃~ 50℃ (14℉~ 122℉) -40℃~ 50℃ (-40℉~ 122℉)
Operating Humidity	p to 85% RH (Non-condensing)
Mechanical	
Material	Aluminum Die Casting / Polycarbonate
Color	Ivory
Dimension	Housing: 148(Φ) x 122(H) mm, Dome: 100(Φ) mm
Weight (Approx)	970 g
Video Content Analysis (Included as Standard)	
High Performance	Advanced Tracking Algorithm, Low False Alarm Rate
Easy to Use	Intuitive Web Browser Interface
Detection Zones	Multi-segment Polygons and Lines
On-screen Display	Real-time Display of Tracking Data and Events
Camera Shake Cancellation	Improve the VCA performance with cameras that are prone to shake
Tamper Detection	Detect camera tampering
Advanced Intelligent Video Analytics (Option)	
Detection Behavior	Direction, Stopping, Loitering, Entering, Exiting, Appear, and Disappear Filters, Abandoned/Removed Object Detection, Tailgating Detection
3D Behavior	Perspective Corrected Size and Speed Filters
Statistics	Counting Functions and Other Statistics
Meta Data	Palin XML Format
Image Stabilization (Option)	
Electronic Stabilization	Removes Camera Sway

RC 3510 – FH

Dimension (unit: mm)

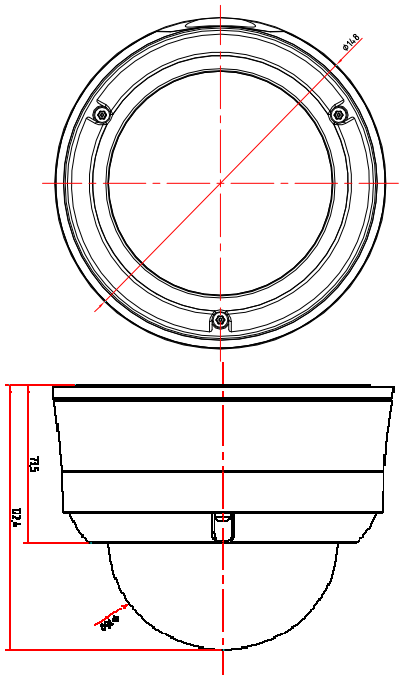

Ordering information

Option Model	Day & Night	WDR	PoE	USB	SD	VCApresence
RC3510-1111	S/W	X	O	X	O	O
RC3510-1211	ICR	X	O	X	O	O
RC3510-2211	ICR	O	O	X	O	O

Product Naming Convention

100: Indoor Fixed Mini Dome type
1100: Standard Box type camera
3510: Outdoor Fixed Dome type with Fan and Heater
5500: Indoor/Outdoor Speed Dome type

RC3510-1111

4th Digit: Power
3rd Digit: Functions
2nd Digit: Day & Night, IR LED
1st Digit: Image Sensor

1st Digit (RCxxxx-Oxxx)	
code	Image Sensor
O	270K CCD
1	410K CCD
2	410K WDR CCD
3	1.3M CCD
5	VGA CMOS
6	1.3M CMOS
7	2M CMOS

2nd Digit (RCxxxx-xOxx)	
code	Day&Night, IR LED
O	None
1	S/W Day&Night
2	IR Cut Day&Night
3	IR LED
4	S/W Day&Night, IR LED
5	IR Cut Day&Night, IR LED

3rd Digit (RCxxxx-xxOx)	
code	Function
O	None
1	S
2	U
3	W
4	SU
5	SW
6	UW
7	SUW

Abbreviation
S = SD memory
U = USB
W = Wireless LAN

4th Digit (RCxxxx-xxxO)	
code	Power
O	DC12V
1	DC12V & PoE
2	AC24V
3	AC24V & PoE
4	DC12V & AC24V
5	DC12V & AC24V & PoE

... more than standard

Accessories

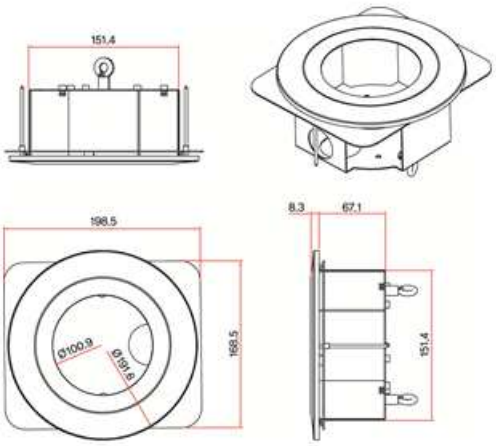

Flush Mount Bracket (FMB-RC3510)

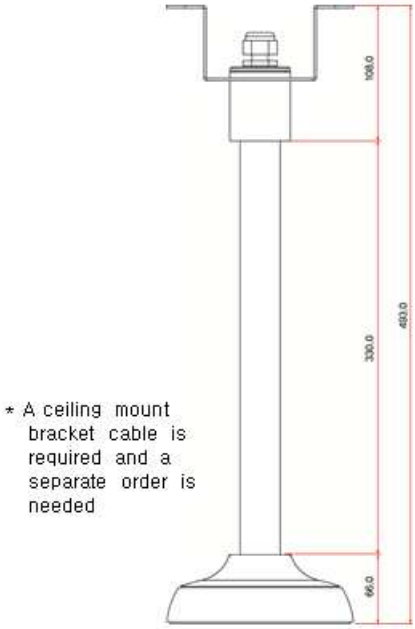

* A ceiling mount bracket cable is required and a separate order is needed

Ceiling Mount Bracket (CMB-35XX-C

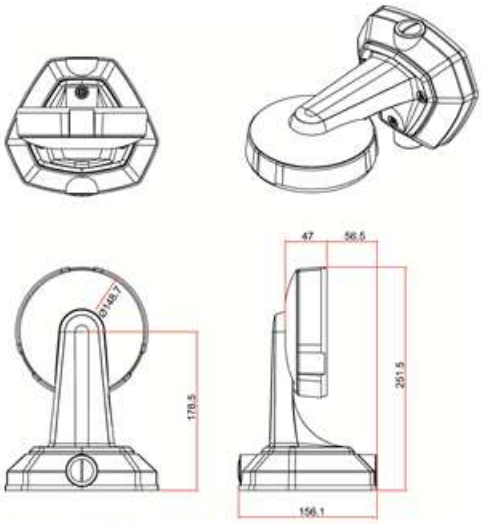

Wall Mount Bracket (WMB-RC35XX)

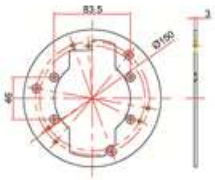

Gang Box Plate (GBP-35XX)

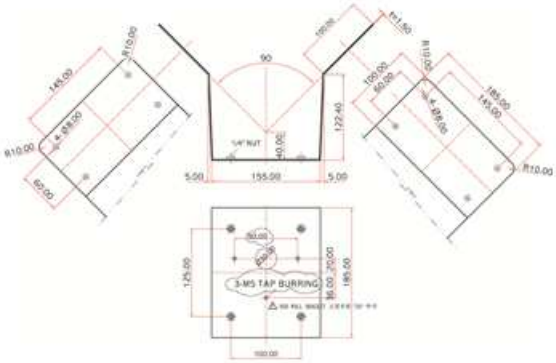

Corner Mount Adaptor (CMA-35XX)

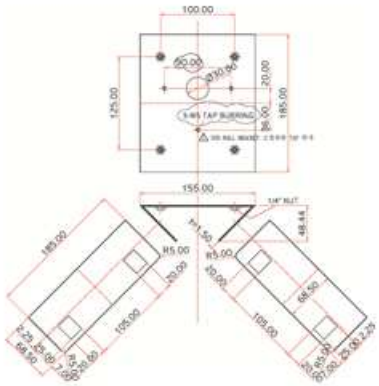

Pole Mount Adaptor (PMA-35XX)