Specifications

WV-TW310(Wearable Camera)

Camera	Image sensor	1/4 type MOS sensor
	Effective pixels	Approx. 1.3 megapixels
	Scanning area	3.60 mm (H) x 2.70 mm (V) [5/32 inches (H) x 11/100 inches (V)]
	Scanning system	Progressive
	Minimum illumination	Color : 1.5 lx [1.5 footcandle] BW : 1.0 lx [1.0 footcandle]
	Wide dynamic range	On/Off
	Adaptive black stretch	On/Off
	Back light compensation	On/Off
	Light control mode setting	Indoor scene (50 Hz/60 Hz) / ELC
	Maximum exposure time	1/30, 3/100, 3/120, 2/100, 2/120, 1/100, 1/120, 1/250,1/500, 1/1000, 1/2000, 1/4000, 1/10000
	Gain (AGC)	On(Low)/ On(Mid)/ On(High)/ Off
	Day & Night (electrical)	Off/Auto
	White balance	ATW1/ ATW2/ AWC
	Digital noise reduction	High/Low
	Personal ID (OSD)	Up to 50 alphanumeric charcters
Lens	Focal length	0.82 mm
	Maximum aperture ratio	1 : 2.6
	Angular field of view	Horizontal : 180° Vertical : 140°
Recording	Resolution	Aspect ratio : 4:3 H.264 1280×960 JPEG 640×480 (Only HTML on PC, 5 fps)
	Image compression method	H.264 Video bit rate :2048 kbps/ 4096 kbps/ 8192 kbps Frame rate : 15 fps/ 30 fps
	Audio compression method	G.726 (ADPCM) 32 kbps
	Recording duration	Auto/Continue/10min/15min/20min/30min/60min/90min
	Pre recording duration	Off/15s/30s
	Overwrite	On/Off
	Audio	On1(not mute during pre recording)/On2(mute during pre recording)/Off
	Compatible SDHC memory card (option)	Manufactured by Panasonic SDHC memory card : 32 GB, Class 10
Network	Network IF	10BASE-T/100BASE-TX
	Protocol *1	IPv6 : HTTP, FTP IPv4 : HTTP, FTP, DHCP
	OS *2 *3	Microsoft Windows 7/Microsoft Windows Vista/Microsoft Windows XP SP3
	Browser	Windows Internet Explorer 9.0 (32-bit) Windows Internet Explorer 8.0 (32-bit) Windows Internet Explorer 7.0 (32-bit) Microsoft Internet Explorer 6.0 SP3
	Maximum concurrent access number	UP to 10 at JPEG, UP to 4 at H.264
Basic	Power source	12 V DC, PoE (IEEE802.3af compliant)
	Power consumption	12 V DC*: 650 mA, PoE : 220mA 11 W (Class 0 device) * ONLY CONNECT 12 V DC CLASS 2 POWER SUPPLY or LIMITED POWER SOURCE.
	Ambient operating temperature	−10 °C to +50 °C [14 °F to 122 °F] While worn on body : −10 °C to +45 °C [14 °F to 113 °F]
	Ambient operating humidity	Less than 90 % (no condensation)
	Continuous operating time	About. 5 hours (at normal temperature, at the time of purchase when charged fully)
	Battery	WV-TB311 (Lithium-ion battery) only
	Dimensions	45 mm (W) x 75 mm (H) x 41 mm (D) [1-25/32 inches (W) x 2-15/16 inches (H) x 1-5/8 inches (D)] (Excluding the cable and projection.)
	Mass	WV-TW310L : Approx. 210 g [0.46 lbs.] WV-TW310S : Approx. 160 g [0.35 lbs.]
	Cable Length	WV-TW310L : 950 mm [37-3/8 inches] WV-TW310S : 600 mm [23-5/8 inches]
	Finish	Black

WV-TB311(Battery Container)

Basic	Rated voltage and capacity	3.7 V DC/ 2450 mAh/ 9.1 Wh
	Battery type	Rechargeable Li-ion battery
	Ambient operating temperature	−10 °C to +50 °C [14 °F to 122 °F]
	Humidity	Less than 90 % (no condensation)
	Dimensions	60 mm (W) x 100 mm (H) x 36.5 mm (D) [2-3/8 inches (W) x 3-15/16 inches (H) x 1-7/16 inches (D)]
	Mass	Approx. 150 g [0.33 lbs.]
	Finish	Black

WV-TC312(Conversion box)

Network	Network	10BASE-T/100BASE-TX, RJ45 connector
Basic	Power source	12 V DC, PoE (IEEE802.3af compliant)
	Power consumption	12 V DC*: 650 mA, PoE: 220mA 11 W (Class 0 device) * ONLY CONNECT 12 V DC CLASS 2 POWER SUPPLY or LIMITED POWER SOURCE.
	Ambient operating temperature	−10 °C to +50 °C [14 °F to 122 °F]
	Ambient operating humidity	Less than 90 % (no condensation)
	Dimensions	97 mm (W) x 97 mm (H) x 155 mm (D) [3-13/16 inches (W) x 3-13/16 inches (H) x 6-3/32 inches (D)] (Including the stand. Excluding the cable and projection.)
	Mass	Approx. 300 g [0.66 lbs.] (Including the stand.)
	Finish	Black
	LED	POWER (GREEN)

*1 Only use IPv4 for transmissions between the Wearable Camera Agent Software and the camera.
*2 Refer to "Notes on Windows®/ Internet Explorer® versions" (included in the CD-ROM) for further information about system requirements for a PC and precautions when using Microsoft Windows 7, Microsoft Windows Vista or Internet Explorer.
*3 When using IPv6 for communication, use Microsoft Windows 7 or Microsoft Windows Vista.

Trademarks and registered trademarks
-Microsoft, and Windows are registered trademarks of Microsoft Corporation in the U.S. and other countries.
-All other trademarks identified herein are the property of their respective owners.

Important
- Panasonic recommends a dedicated PC to prevent installation errors and to keep best performance.
- Safety Precaution: carefully read the operating instructions and installation manual before using this product.
- Panasonic can not be responsible for network performance and/or other manufacturer products that reside on the network.

Appearance

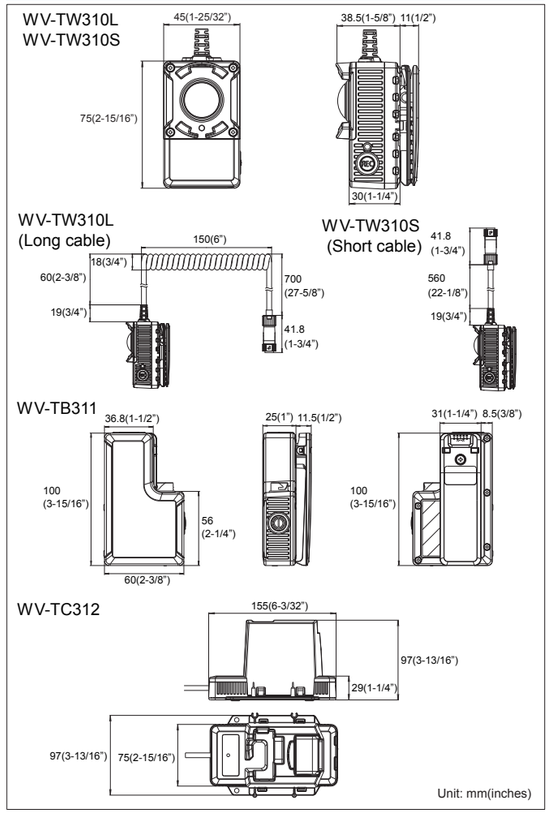

Part Names and Functions

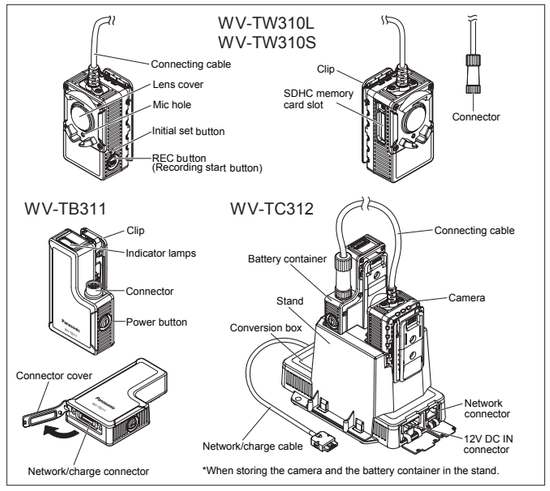

- All TV pictures are simulated.
- Masses and dimensions are approximate.
- Specifications are subject to change without notice.
- These products may be subject to export control regulations.

DISTRIBUTED BY :

Panasonic®

http://panasonic.net/security/

Printed in Japan (2Y-002A)

Panasonic
ideas for life

Wearable Camera
WV-TW310 Series

Wearable Camera (Long cable)
WV-TW310L
Wearable Camera (Short cable)
WV-TW310S
Battery Container
WV-TB311
Conversion Box
WV-TC312

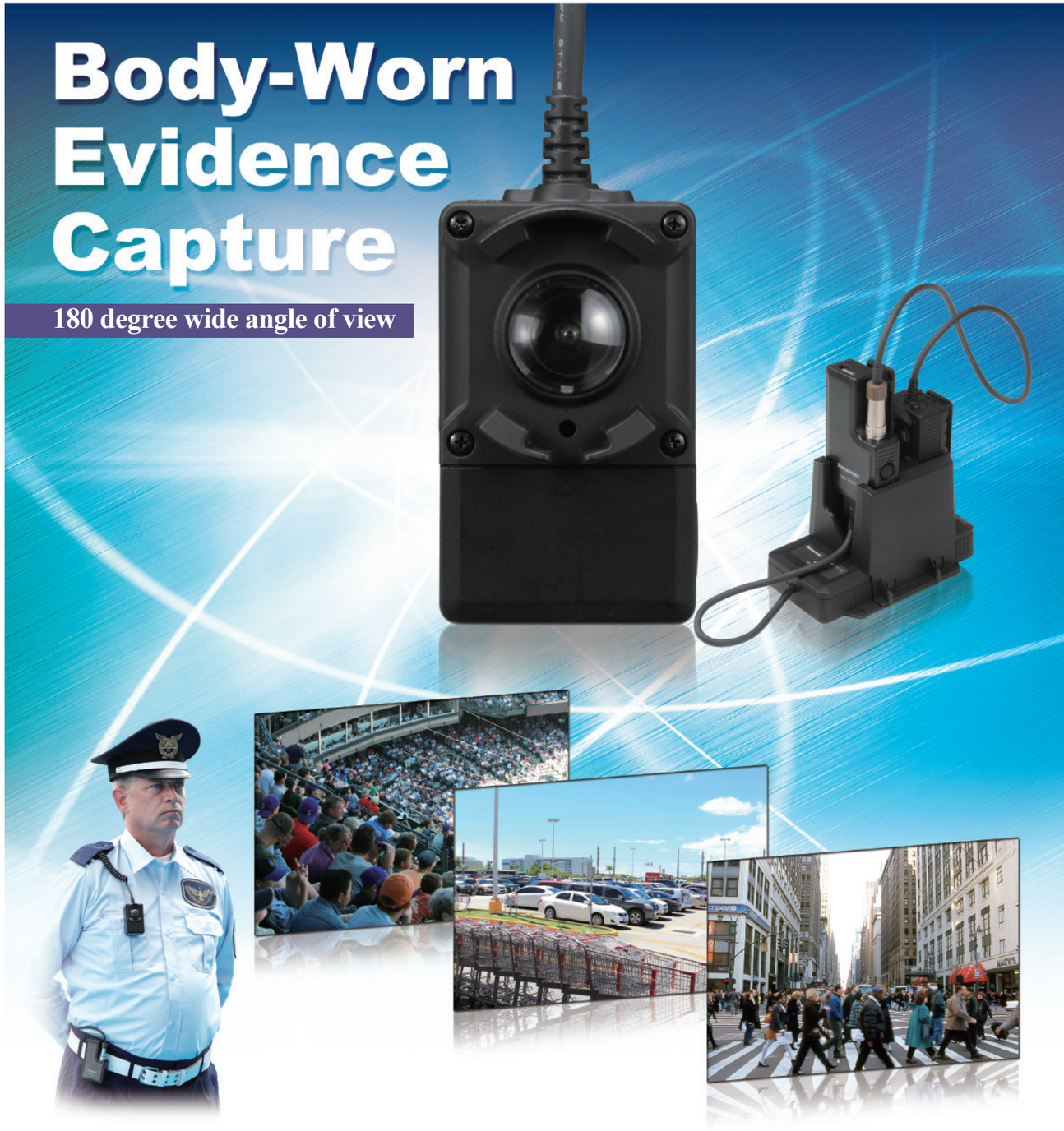

Wearable Camera
WV-TW310 Series

WV-TW310 Series Wearable Cameras are battery-powered cameras that are used to record images while being worn on a human body. Each camera has a fisheye lens that achieves extremely wide angles of view. H.264 images are recorded on the SDHC memory card of the camera.
Panasonic's long-term camera technology cultivated for security is being utilized for this wearable camera.

180 Degree Wide Angle

WV-TW310 Wearable Camera offers a 180 degree wide angle lens and high-resolution to record the entire party or objects that would be in a camera's wide angle view whether they are at close range or at a distance.

- **1.3 megapixel resolution**
- **Wide Angle Fish-eye Lens** can cover approximately **180° horizontal view** and **140° vertical view** beyond the human field-of-view.
- **Wide Dynamic Range** allows the camera to capture details in dark and light areas simultaneously.
- **High-color reproduction** by primary color filter
- **Day/Night** function available for automatic Color / Black & white mode switching.

Wide angle Fish-eye Lens

Wide Dynamic Rang

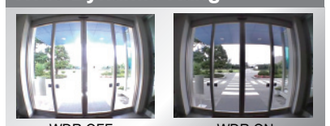

WDR OFF WDR ON

H.264 Recording

Images are encoded to H.264 and saved on the SDHC memory card. It is possible to record up to approximately 32 hours*1 depending on the video bit rate. Panasonic technology with the UniPhier LSI enables high compression and high quality.

UniPhier

- **1280 x 960** image size, **up to 30fps**
- H.264 bit rate can be selected from 8192kbps/4096kbps/2048kbps
- **Pre recording** is possible **up to 30 seconds***2
- **Audio recording** using built-in microphone with G.726(ADPCM) 32kbps

*1: When the recording bit rate is 2048kbps.
*2: Can be selected when the bit rate is 4096kbps or 2048kbps.

SDHC memory card(optional)

Recommended SD memory card
Manufactured by Panasonic
SDHC memory card
(Class10, 32GB)

Possible time of H.264 image that can be saved on the SDHC card. (32GB)

Recording bit rate		
2048kbps	4096kbps	8192kbps
Approx. 32 hours	Approx. 16 hours	Approx. 8 hours

Image Correction

Wearable Camera Viewer Software enables the images to playback with stabilization and distortion correction.
By the gyroscope compensation, the picture would always be easy to view even if the camera's direction is rotated.

- **Gyro Compensation;**
  By 3-axis gyro sensor, the vibration image occurring when walking or running can be reduced and stabilized.
- **Image Compensation;**
  The stabilized image cut out from original fisheye image can be corrected by image compensation technology.

Image Compensation

Fish-eye original image | Stabilize image | Full correct image

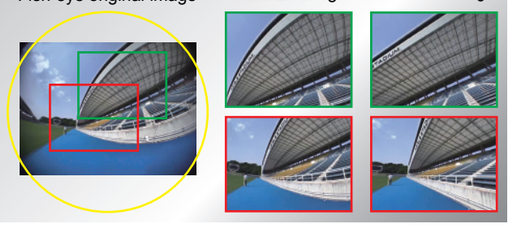

How to record?

Start recording

1.Connect the battery container.
2.Press the Power button on the battery.
3.Press the REC button on the camera.

Stop recording

1.Press and hold the REC button for 2 seconds or more.

- Recording can be stopped with the timer setting.
- Audio can be selected whether or not to perform audio recording during recording or pre recording.
- Audio recording can be switched to mute/unmute by pressing the REC button during recording.*

*When [Key function] is set to [Audio mute/unmute]

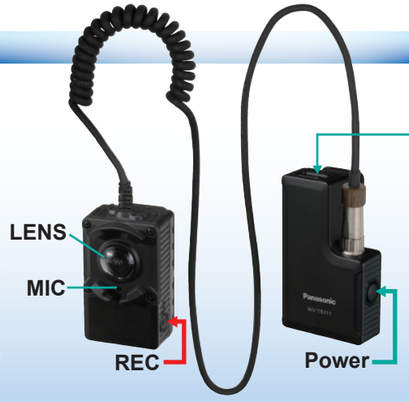

Indicator lamps

The battery container's indicators light help you with understanding the status of the camera.

- Power (battery) status
- Recording(images/audio) status
- SD memory status

WV-TW310 Components

Wearable Camera WV-TW310L (Long cable)

Wearable Camera WV-TW310S (Short cable)

Battery Container WV-TB311

Conversion Box WV-TC312

* With Stand

Rugged Design

WV-TW310 Series Wearable Cameras are rugged and have two different lengths of cable fit to the various applications. Design for two pieces allows the battery to be changed without removing the camera from clothing. These camera units and battery also allow you to function under conditions including wind and rain.

- **Continuous operating time** is approximately **5 hours***3 when the battery charged fully.
- **Recharging the battery** within **3.5 hours** under normal conditions.
- **IP65-compliant** Dust and Water-resistant

*3: At normal temperature, at the time of purchase.

Example of wearing TW310L

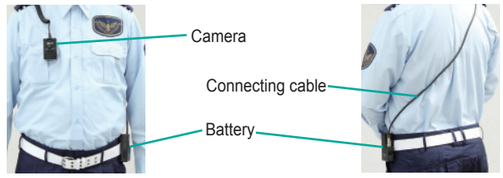

Example of wearing TW310S

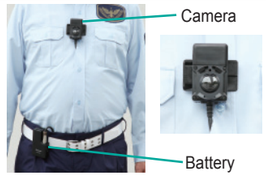

The camera clip can be attached in 4 directions to the camera depending on where you want to fix the camera.

Tamper Proof Video

The Video image data can be scrambled and the scrambled image data uploaded to a PC can be verified by the Viewer Software.

Network Configuration with Power over Ethernet

The video saved on the camera can be uploaded to a PC automatically and the camera battery can be charged by connecting to a LAN with a PoE device.*4

*4: Charging begins automatically when the temperature enters the allowable range.

System Connection Example

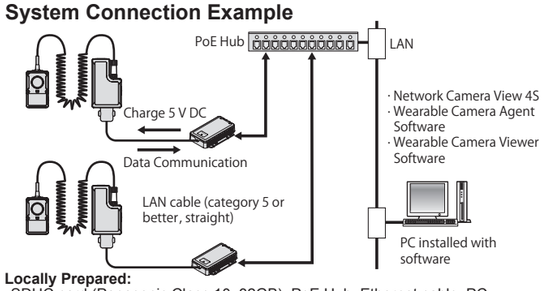

Locally Prepared:
SDHC card (Panasonic Class 10, 32GB), PoE Hub, Ethernet cable, PC

Easy camera settings with web browser

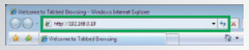

〈Example of IPv4 access〉
http://URL registerd IP address

Live image

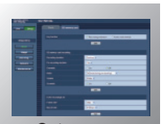

Setup menu

How to play images?

WV-TW310 series includes two PC software applications. It is necessary to install Wearable Camera Agent Software and Wearable Camera Viewer Software to play recorded data with the camera.

Agent Software

The video image data on the camera is automatically uploaded to a PC combining the multiple video image data via the conversion box.

- Upload and save video data
- Remove the recorded data from the Camera after uploading
- Help to find wearable camera

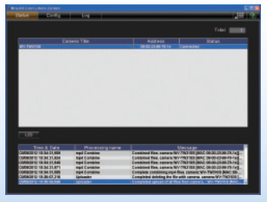

Viewer Software

Viewer software enables the fisheye original picture images to play back with stabilization by gyro information and distortion correction.

- Playback
- Click centering, EL zoom
- Snapshot
- Verifying (Integrity Check)

Correction Mode Settings

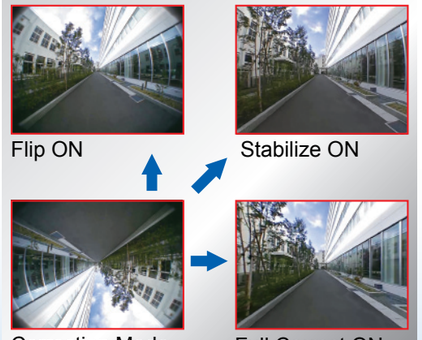

Flip ON | Stabilize ON | Correction Mode OFF | Full Correct ON