# Type 554
## Surveillance Dome

The type 554 Mini-dome kits are elegantly styled, 8" diameter, discreet environmental surveillance units. Available in a range of configurations, the domes are constructed from aluminium alloy spinnings, die castings and extrusions, and feature a clear acrylic dome. Designed for ease of installation, service and relocation the complete assembly can be removed from the mounting in minutes. The releasing of 4 security fixings enables engineers to expose the central connector, disconnection of which provides withdrawal of the complete unit. Once removed the casing and hemisphere can be easily separated. This unit has been designed to offer weatherproof protection to most of the popular range of indoor dome cameras. A fixed attitude camera version is also available with a max camera/ lens size of 70H x 70W x 150L.

## benefits

- 8" DIAMETER
- ELEGANTLY STYLED
- DISCREET ENVIRONMENTAL SURVEILLANCE UNITS
- DISTORTION FREE, WITH A LIGHT ATTENUATION FACTOR OF LESS THAN 1 F.STOP
- QUICK RELEASE SECURITY FIXINGS
- CAN BE REMOVED IN MINUTES - FOR EASE OF INSTALLATION, SERVICE AND RELOCATION

## build options

- /JVC-C676 = TK-C676
- /SPEED DOME = ULTRA CAMERA DOME
- /CHUGAI = SMD-12P + M200FP BASE UNIT
- /SANYO = VCC 9200P + BASE UNIT
- /PANASONIC 850 = CS 850
- /PANASONIC FIXED = WV-CF250/254
- /SD = SILVERED DOME
- /FA = FIXED ATTITUDE

data sheet

# Type 554 Surveillance Dome

**Wall/Pendant Mount- /WM**

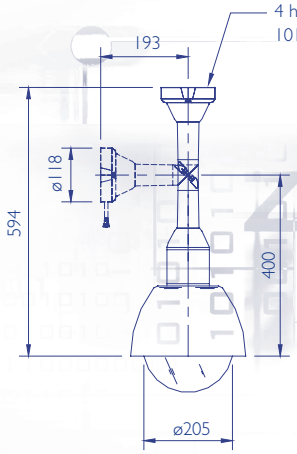


**Snowdrop Mount- /SM**

**Pendant Mount- /PM**

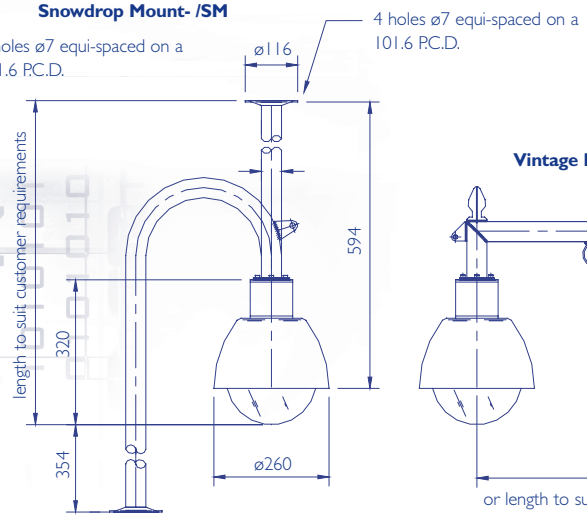


**Vintage Mount- /VM**

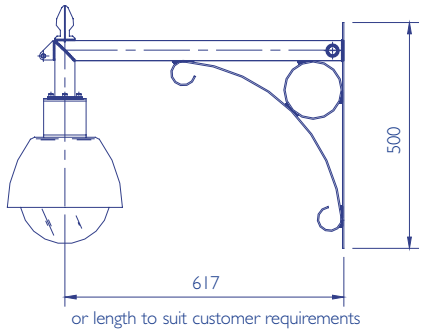


**Corner Mount- /CM**

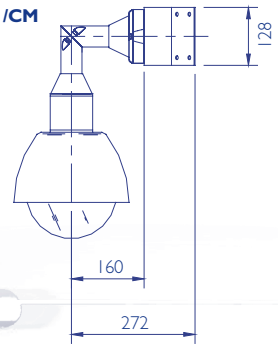


**All Dimensions in millimetres**

# Specification

**WEIGHT**
- 7kg

**HEATER BLOWER**
- 24Va.c. or d.c. 25VA (240-24 Transformer can be supplied with mains driver dome cameras)

**CONNECTION**
- 2 Metre flying lead

**ENVIRONMENTAL PROTECTION**
- IP65 of BS.EN 60529

# Order codes

- 554-329
- 554-340
- 554-8/AXIS
- 554-8/JVC
- 554-8/JVC-SN
- 554-8/P-CS850

PLEASE CHECK THE WEBSITE FOR LATEST DEVELOPMENTS

FOR FURTHER INFORMATION PLEASE CONTACT


**Dedicated Micros UK** 11 Oak Street, Swinton, Manchester, M27 4FL, UK Tel: +44 (0) 161 727 3200 Fax: +44 (0) 161 727 3300.

**Dennard UK** Tel: +44 (0)1252 614884 Fax: +44 (0)1252 626013 e-mail: sales@dennard-cctv.com

**Dedicated Micros USA** 14434 Albemarle Point Place, Suite 100, Chantilly, Virginia 20151 USA Freephone: 800 864 7539 Tel: +1 703 904-7738 Fax: +1 703 904-7743 and 23456 Hawthorne Blvd. Suite 100, Torrance, CA 90505, Tel +1 310 791-8666 Fax: +1 310 791-9877.

**Dedicated Micros Europe** Neckarstraße 15, 41836 Hückelhoven, Germany Tel: +49 243 352 580 Fax: +49 24 33 52 58 10 e-mail: infobox@dmicros.com

**Dedicated Micros Belgium** Joseph Chantraineplantsoen 1, 3070 Kortenberg, Belgium Tel: +32 2751 3480, Fax: +32 2751 3481 e-mail: dmbenelux@dmicros.com

**Dedicated Micros Ltd. Slovenija** Delavska cesta 26, 4208 Sencur-Slovenija Tel: +386 (4) 279 18 90, Fax: +386 (4) 279 18 91 e-mail: dmslovenia@dmicros.com

**Dedicated Micros France** 9-13 rue du Moulinet, 75013 Paris, France Tel: +33 1 45 81 99 99, Fax: +33 1 45 81 99 89. e-mail: dmfrance@dmicros.com

**Dedicated Micros Asia** 16 New Industrial Road, #03-03 Hudson Techno Centre, Singapore 536204 Tel : +65 62858982 Fax : +65 62858646.

**Dedicated Micros Australia** 5/3 Packard Avenue, Castle Hill, NSW 2154, Australia Tel: +612 9634 4211 Fax: +612 9634 4811.

**Dedicated Micros Malta** UB 2, San Gwann Ind. Est., San Gwann, Malta Tel: +356 21483 673 Fax: +356 21449 170.

**Dedicated Micros Middle East** Building 12, Suite 302, P.O.Box 500291, Dubai Internet City, Dubai, United Arab Emirates Tel: +971 (4) 390 1015, Fax: +971 (4) 390 8655.



The manufacturer reserves the right to change the specification without notice.

All trademarks are courtesy of registered owners.
DM is a trademark of Dedicated Microcomputers Group Ltd.



REF: DM01/05


DEDICATED MICROS

**www.dedicatedmicros.com**


*Doc 74 0255*