# WZ14 Integrated IR Bullet Camera

www.boschsecurity.com

BOSCH
Invented for life

Advantage Line

The WZ14 provides reliable day and night surveillance in a compact, water resistant design that integrates 30 infrared LEDs for 15 m (49 ft) of night vision.

Incorporating a SuperHAD 1/3 in CCD, the camera delivers 380 TVL of color imaging during day and active-infrared monochrome at night. The 30 integrated infrared LEDs deliver up to15 m (49 ft) of night vision for effective 24/7 performance. The photocell-controlled LEDs ensure accurate on/off switching and help increase energy efficiency.

For indoor and outdoor environments, the WZ14 is a quick and easy Plug-and-Play solution for 24/7 day and night surveillance.

## Features

- Reliable 24/7 day and night surveillance,
- Night vision in zero lux at 15 m (49 ft)
- Wide angle viewing
- Discreet outdoor operation
- Quick installation

## Technical Specifications

| Video | |
|---|---|
| CCD Image Sensor | 1/3 in SuperHAD CCD |
| Type | Color / monochrome, video level switching |
| Resolution | 380 TVL |
| Effective Pixels (H x V) | PAL: 500 x 582, NTSC: 510 x 492 |
| Night-Time Sensitivity | 0 lux (infrared on) |
| Electronics Iris | 1/50 to 1/100,000 s (PAL), |
| | 1/60 to 1/100,000 s (NTSC) |
| Output Signal | 1 Vpp composite video, 75 ohm |
| S/N Ratio | Greater than 45 dB |
| Gamma | 0.45 |
| Lens | Fixed 4 mm lens |
| LEDs | Infrared array, photocell-controlled |
| Wavelength | 850 nm |
| Number of LEDs | 30 |
| **Electrical** | |
| Voltage | 12 VDC |
| Power Draw | 250 mA to 420 mA. |
| Power Supply | Not included |
| **Mechanical** | |
| Construction | Aluminum |
| Finish | Silver-gray |
| Sunshield | Included |
| Bracket | Pan-tilt bracket included |
| Weight | 0.39 kg (0.86 lb) |
| Dimensions | 64.5 x 67 x 112 mm<br>(2.5 x 2.6 x 4.4 in.) |
| **Environmental** | |
| Operation Temperature Range | -30 ºC to +50 ºC (-22 ºF to +122 ºF) |
| Environment | IP67 compliant |
| **Certifications and Approvals** | |
| **Standards** | |
| | ANSI C63.4: 2003<br>FCC Part 15 subpart B, Class A |
| | UL 60065, 7th Edition. 2007-12-11 |
| | CAN/CSA-C22.2 No. 60065-03, 1st Edition, 2006-04 + A1:2006 |
| | EN55022:2006, Class A |
| | EN50130-4:1995+A1:1998+A2:2003 |
| | EN61000-3-2:2006 |
| | EN61000-3-3:1995 + A1:2001 + A2:2005 |
| | LVD 2006/95/EC<br>EN60065:2002 + A1:2006 + A11:2008 |
| | IP67, IEC 60529 (2001) |

### Installation/Configuration Notes

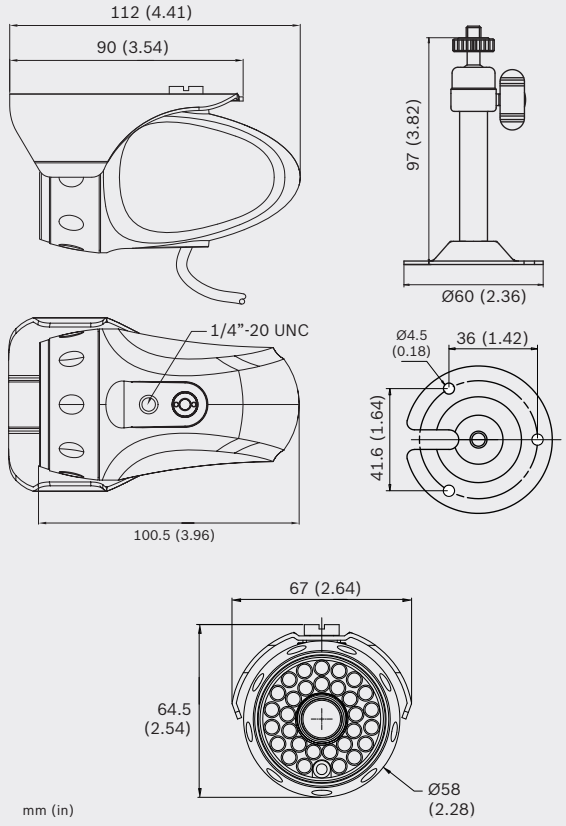


### Ordering Information

| | |
|---|---|
| VTI-214F04-4 WZ14 Integrated IR Bullet Camera, NTSC | VTI-214F04-4 |
| VTI-214F04-3 WZ14 Integrated IR Bullet Camera, PAL | VTI-214F04-3 |
| **Accessories** | |
| UPA-1220-60 Power Supply | UPA-1220-60 |
| UPA-1220-50 Power Supply | UPA-1220-50 |

**Americas:**
Bosch Security Systems, Inc.
130 Perinton Parkway
Fairport, New York, 14450, USA
Phone: +1 800 289 0096
Fax: +1 585 223 9180
security.sales@us.bosch.com
www.boschsecurity.us

**Europe, Middle East, Africa:**
Bosch Security Systems B.V.
P.O. Box 80002
5600 JB Eindhoven, The Netherlands
Phone: + 31 40 2577 284
Fax: +31 40 2577 330
emea.securitysystems@bosch.com
www.boschsecurity.com

**Asia-Pacific:**
Robert Bosch (SEA) Pte Ltd, Security Systems
11 Bishan Street 21
Singapore 573943
Phone: +65 6571 2808
Fax: +65 6571 2699
apr.securitysystems@bosch.com
www.boschsecurity.asia

**Represented by**

© Bosch Security Systems 11 | Data subject to change without notice
T7483580555 | Cur: en-US, V4, 9 Sep 2011