BOSCH
Invented for life

AutoDome 300 Series PTZ Camera System

- **High-speed PTZ dome**
- **Fully interchangeable CPUs, cameras, housings, communications, and mounts**
- **Choice of 540 TVL 36x day/night night camera with 128x wide dynamic range or 26x and 18x day/night cameras**
- **Optional hybrid operation provides simultaneous analog (coax) and IP connectivity**
- **Advanced privacy masking**
- **Advanced alarm control with rules engine**
- **UTP transmission standard on all analog models**
- **Cable compensation extends cabling distances**
- **Multi-protocol capable**
- **Three-year warranty**

Bosch's AutoDome modular camera system is a revolutionary new concept in dome cameras. More than just a series of cameras, it's a dome platform built around a system of intelligent, interchangeable modules that allow you to update camera functionality quickly and cost-effectively. Using common components lets you install a basic camera system today and migrate to a more advanced version tomorrow – without having to replace the entire dome, thus protecting your initial investment.

Interchangeable modules

The entire AutoDome system is based on five interchangeable modules: the CPU, camera, housing, communications, and power supply. Simply swap one of AutoDome's interchangeable modules and quickly upgrade from analog to IP, color to day/night, or add motion detection. Never before have you had the ability to adapt a security system to your changing needs this quickly or inexpensively.

By using the same housing components, all installations have a consistent look, and observers have no idea which type of camera (if any) is watching over them. This unique, modular design also gives you the flexibility to move cameras between different housings when special coverage is needed, or as site plan requirements change. For example, an 18x PTZ camera over a specific area could easily be "hot-swapped" to a 26x or 36x day/night without removing the power.

Migrating from a basic dome to one with advanced features such as AutoTrack II intelligent tracking can be done quickly and easily, without requiring dome removal or rewiring. AutoDome's Ethernet communications module allows you to add IP functionality while maintaining connectivity to existing analog inputs and outputs.

300 Series highlights

The AutoDome 300 Series includes support for 18x, 26x, and the industry-leading 36x day/night PTZ cameras, and several advanced features – including an alarm management "rules" engine and privacy masking.

The AutoDome 300 Series supports a variety of standard and optional video and data transmission methods, including Bilinx (over coax and UTP), fiber, and even TCP/IP over Ethernet. Remote control, configuration, and firmware updates can also be performed over these cables, offering you unparalleled control of your cameras. Cable compensation provides extended coaxial and UTP distance runs while preventing the image quality degradation caused by signal losses from long cable lengths.

The optional IP Communications Module has hybrid functionality to protect your current analog technology investment while providing a clear and stable migration path to fully digital, IP-based solutions. This allows you to move to IP video at your own pace – all at once or one camera at a time. And since all AutoDome modules are completely interchangeable, there is no need to replace expensive components (e.g., cameras) or labor-intensive components (e.g., mounts and housings).

Functions

The following are some of the features that make the AutoDome 300 Series the most flexible PTZ dome camera systems in the security industry.

High-performance PTZ day/night cameras

Image control and quality are integral aspects of any PTZ dome system, and the AutoDome delivers. The 300 Series is available with a choice of 18x, 26x, or an industry-leading 36x optical zoom lens, and all 300 Series systems offer a full 12x digital zoom. The 18x and 26x cameras provide 470 TVL (NTSC) or 480 TVL (PAL), and the 36x camera provides a full 540 TVL of horizontal resolution for outstanding clarity and image detail. The 36x camera also incorporates technology that dramatically improves the dynamic range by 128 times. Also known as WDR (wide-dynamic range), it results in clear image reproduction in extreme high-contrast environments.

The AutoScaling (proportional zoom) and AutoPivot (automatically rotates and flips the camera) features ensure optimal control.

Day/night capabilities and outstanding sensitivity make 300 Series cameras exceptional performers in all lighting conditions. In low light, these cameras automatically switch from color to monochrome by removing the IR filter to boost infrared illumination sensitivity, while maintaining superior image quality. For operation in the darkest conditions, the SensUp control feature automatically extends the shutter speed to as much as one second. This increases sensitivity by more than **50** times.

With super-quick, 360° per-second pan and tilt speeds, the AutoDome 300 Series outperforms other domes in its class. The 300 Series supports 99 pre-positions and two styles of guard tours: preset and record/playback. The preset tour can handle up to 99 pre-positions with a configurable dwell time between pre-positions; the order and frequency with which each preset is visited can be customized. The AutoDome 300 Series also provides support for two recorded tours, which have a combined duration of 15 minutes of movement. These are recorded macros of an operator's movements, including pan, tilt, and zoom activities, and can be played back continuously.

Supported menu languages include: English, French, German, Spanish, Portuguese, Italian, Dutch, and Polish.

Alarm management

The AutoDome 300 Series takes alarm handling to new levels of flexibility and power.

Inputs and outputs

The AutoDome 300 Series can handle seven alarm inputs: two of these are analog inputs that can be programmed for EOLR (End-of-Line Resistor) supervision whenever true security applications require it. These inputs enable the dome to "sense" if the contact is opened or closed *and* whether the wire has been tampered with (either by being cut or shorted). In addition, the AutoDome 300 Series supports four outputs: one relay rated at two amps and three additional open collectors for driving external devices. Each can be programmed individually.

Advanced alarm control

This new concept in flexibility goes beyond simple alarm handling. Advanced alarm control uses sophisticated rules-based logic to determine how to manage alarms. In its most basic form, a "rule" could define which input(s) should activate which output(s). In a more complex form, inputs and outputs can be combined with pre-defined or user-specified keyboard commands to perform advanced dome functions. There is virtually no limit to the number of combinations that you can program, making the standard software in the dome ready for any application.

Superior privacy masking

The AutoDome 300 Series allows for a total of 24 individual privacy masks, with up to eight displayed in the same scene. Unlike conventional privacy masks, these can each be programmed with three, four, or even five corners to cover more complex shapes. As the camera is zoomed each mask changes size smoothly and quickly ensuring that the covered object cannot be seen. You also have a choice of colors: black, white, and blurred. Blurred comes in handy when privacy is an issue, but determining the presence of motion is still required.

Optional hybrid analog/IP operation

With both Ethernet and BNC connections, AutoDomes equipped with a TCP/IP Communications Module can simultaneously stream IP video across a local or wide area network, and CVBS video via coaxial cabling to support existing analog equipment. Network video streams are sent over IP networks and can be viewed with the Bosch Divar XF Digital Video Recorder, or on a PC running VIDOS video management software. Alternatively, a Bosch IP video decoder can be used to display the video on an analog CVBS or VGA monitor. For maximum accessibility, the video can be viewed using a web browser.

Tri-streaming video

Bosch's innovative tri-streaming feature enables AutoDomes equipped with the optional IP communications module to generate independent streams simultaneously. This feature allows you to stream high-quality images for live viewing while recording at a reduced frame rate, and at the same time, stream images to a remote PDA device.

Unsurpassed reliability

All housings feature recessed screws and latches for increased tamper resistance.

AutoDome pendant housings (indoor and outdoor) are rated to provide IP 66 protection. In addition, the pendant housings come equipped with a low-impact, high-resolution acrylic bubble for enhanced image clarity

AutoDome in-ceiling housings provide IP 54 protection and are rated IK 8 (IEC 62262). These housings feature an impact-resistant polycarbonate Rugged Bubble to protect your camera from vandalism. The Rugged Bubble can withstand impacts equivalent to a 4.5 kg (10 lb) weight dropped from a height of 3 m (10 ft).

Outdoor EnviroDome housings provide an operating temperature range down to -40°C (-40°F). The optional "XT" extreme temperature kit allows an AutoDome to operate in temperatures down to -60°C (-76°F), ensuring reliable operation in even the harshest environments.

The Pressurized Environmental Housing is rated to provide IP 67 protection for a VG4 Series AutoDome® Modular Camera System from the elements, both natural and manmade. It is the ideal surveillance solution for applications that require frequent wash-down, including traffic, transit, bridges, tunnels and coastal installations where salt, moisture, dust, insects and fumes threaten the long-term operation of the camera.

Ease of installation and servicing

Bosch's innovative software, the Configuration Tool for Imaging Devices (CTFID), allows operators or technicians to control the PTZ, change camera settings, and even update firmware from virtually anywhere without need for additional wiring. For the new Ethernet versions, an embedded Web server lets the installer access all the user settings, make camera adjustments, and update firmware via a standard Web browser.

AutoDome's innovative design simplifies installation and servicing. AutoDome reduces maintenance costs because you can replace individual modules instead of entire camera assemblies. Simply pop out the old module and slide in the new: it's almost as easy as changing a light bulb. All tethers have been replaced with hinges, making installation and servicing safer and easier. You can even access the built-in power supply without taking down the dome.

The AutoDome 300 Series has advanced built-in diagnostics to simplify service and minimize downtime. Using the On Screen Display (OSD), a technician can quickly and easily check critical parameters (such as internal temperature and input voltage level) to verify that the dome is functioning within acceptable operating limits. If video is not present, a local inspection of three diagnostic LEDs at the camera site can identify the presence of video and control data.

Feature Comparison Matrix

The following table provides an overview of the AutoDome camera family and its available features:

Standard Features	AutoDome 100 Series	AutoDome 200 Series	AutoDome 300 Series	AutoDome 500i Series
Interchangeable Modules	●	●	●	●
High Speed PTZ		●	●	●
Preset Shots		64	99	99
Preset Tour		●	●	●
Guard Tour			●	●
Alarm Inputs			7/4	7/4
High Resolution Camera	●	●	●	●
Day/Night Operation	●		●	●
IR Sensitive	●		●	●
SensUp Extended Sensitivity	●		●	●
UTP/Coax Transmission	●	●	●	●
Hybrid Analog/IP Connectivity	●	●	●	●
Bilinx Remote Configuration*	●	●	●	●
Cable Compensation			●	●
Hot-Swap Camera Modules	●	●	●	●
Ruggedized, Vandal-Resistant Enclosure	●	●	●	●
Advanced Features				
AutoTrack II Motion Tracking				●
Video Motion Detection				●
Image Stabilization				●
Privacy Masking and Sector Blanking			●	●
Advanced Alarm Control			●	●

*Compatible over Coax and UTP transmission only. Remote configuration over IP via web interface.

Certifications and Approvals

Region	Certification	
Europe	CE	VG4-1ab-cdefgh, VG4-2ab-cdefgh, VG4-3ab-cdefgh, VG4-5ab-cdefgh, VG4-A-PAxx, VG4-A-PSUxx
Electromagnetic Compatibility (EMC)	Complies with FCC Part 15, ICES-003, and CE regulations, including EN50130-4 and EN50121-4	
Product Safety	Complies with CE regulations, UL, CSA, EN, and IEC Standards	

Installation/Configuration Notes

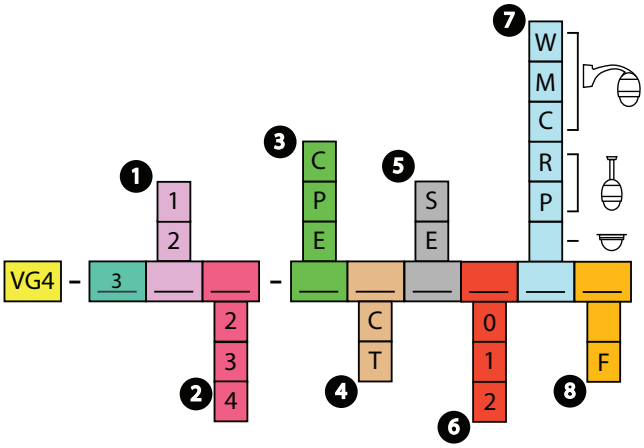

1 Video Format

- 1 PTZ PAL
- 2 PTZ NTSC

2 Camera Type

- 2 18x Day/Night PTZ
- 3 26x Day/Night PTZ
- 4 36x Day/Night PTZ

3 Enclosure

- C In-ceiling[2]
- P Indoor Pendant
- E Outdoor Pendant

4 Bubble

- C Clear
- T Tinted

5 Communications

- S Standard Analog (Coax/ UTP)
- E Ethernet (TCP/IP)

6 Power

- 0 24 VAC[1]
- 1 120 VAC
- 2 230 VAC

7 Mount

- W Wall
- M Mast
- C Corner
- R Roof[4]
- P Pipe

8 Fiber Optics

- _ No Fiber
- F Fiber[3]

1 No transformer included. Customer must supply an approved 24 VAC limited power supply (VG4-A-PSUx or equivalent).

2 Recessed in-ceiling housing units do not require kit options for reference numbers 6, 7, or 8.

3 Fiber optic option is multi-mode with biphase. Requires LTC 4629 at the system.

4 Roof mount mounts to vertical Parapet. For flat roof installation, order an additional LTC 9230/01 Flat Roof Adapter Plate.

Technical Specifications

Camera 36x Day/Night

Imager	1/4 in. Exview HAD CCD	
	(752 x 582 PAL)/(768 x 494 NTSC)	
Lens	36x Zoom (3.4 –122.4 mm) F1.6 to F4.5	
Focus	Automatic with manual override	
Iris	Automatic with manual override	
Field of View	1.7° to 57.8°	
Video Output	1.0 Vp-p, 75 Ohm	
Gain Control	Off/Auto (with adjustable limit)	
Synchronization	Line-Lock (–120° to 120° vertical phase adjust) or internal crystal	
Aperture Correction	Horizontal and vertical	
Digital Zoom	12x	
Horizontal Resolution	540 TVL (NTSC, PAL) typical	
Sensitivity (typical) [5]	**30 IRE**	**50 IRE**
Day Mode		
SensUp Off	0.66 lx	1.4 lx
SensUp On (15x)	0.033 lx	0.083 lx
Night Mode		
SensUp Off	0.166 lx	0.33 lx
SensUp On (15x)	0.0065 lx	0.0164 lx
Electronic Shutter Speed (AES)	1 to 1/10,000	
SNR	>50 dB	
White Balance	2000 K to 10,000 K	

5 F1.6, 1/60 (1/50) shutter, max AGC.

Camera 26x Day/Night

Imager	1/4 in. Exview HAD CCD
	(752 x 582 PAL)/(768 x 494 NTSC)
Lens	26x Zoom (3.5–91.0 mm) F1.6 to F3.8
Focus	Automatic, with manual override
Iris	Automatic, with manual override
Field of View	2.3° to 55°
Video Output	1.0 Vp-p, 75 Ohm
Gain Control	Off/Auto (with adjustable limit)
Synchronization	Line-Lock (–120° to 120° vertical phase adjust) or internal crystal
Aperture Correction	Horizontal and vertical
Digital Zoom	12x
Horizontal Resolution	NTSC: 470 TVL, typical PAL: 480 TVL, typical

Sensitivity (typical)[6]	**30 IRE**	**50 IRE**
Day Mode		
SensUp Off	0.5 lx	1.0 lx
SensUp On (15x)	0.0052 lx	0.013 lx
Night Mode		
SensUp Off	0.10 lx	0.26 lx
SensUp On (15x)	0.0013 lx	0.0026 lx
Electronic Shutter Speed (AES)	1 to 1/10,000	
SNR	>50 dB	
White Balance	2000 K to 10,000 K	

6 F1.6, 1/60 (1/50) shutter, max AGC.

Camera 18x Day/Night

Imager	1/4 in. Exview HAD CCD
	(752 x 582 PAL)/(768 x 494 NTSC)
Lens	18x Zoom (4.1–73.8 mm) F1.4 to F3.0
Focus	Automatic with manual override
Iris	Automatic with manual override
Field of View	2.7° to 48°
Video Output	1.0 Vp-p, 75 Ohm
Gain Control	Off/Auto (with adjustable limit)
Synchronization	Line-Lock (–120° to 120° vertical phase adjust) or internal crystal
Aperture Correction	Horizontal and vertical
Digital Zoom	12x
Horizontal Resolution	NTSC: 470 TVL, typical PAL: 480 TVL, typical

Sensitivity (typical)[7]	**30 IRE**	**50 IRE**
Day Mode		
SensUp Off	0.4 lx	0.7 lx
SensUp On (15x)	0.0041 lx	0.0082 lx
Night Mode		
SensUp Off	0.05 lx	0.17 lx
SensUp On (15x)	0.0007 lx	0.0013 lx
Electronic Shutter Speed (AES)	1 to 1/10,000	
SNR	>50 dB	
White Balance	2000 K to 10,000 K	

7 F1.4, 1/60 (1/50) shutter, max AGC.

Mechanical/Electrical

Model	**In-Ceiling**	**Indoor Pendant**	**EnviroDome®**
Weight	2.66 kg (5.86 lb)	2.88 kg (6.3 lb)	3.32 kg (7.3 lb)
Pan Range	360° cont.	360° cont.	360° cont.
Tilt Angle	1° above horizon	18° above horizon	18° above horizon
Variable Speed	0.1°/s-120°/s	0.1°/s-120°/s	0.1°/s-120°/s
Pre-position Speed	Pan: 360°/s Tilt: 100°/s	Pan: 360°/s Tilt: 100°/s	Pan: 360°/s Tilt: 100°/s
Preset Accuracy	± 0.1° typ.	± 0.1° typ.	± 0.1° typ.
Power	21-30 VAC 50/60 Hz	21-30 VAC 50/60 Hz	21-30 VAC 50/60 Hz
Power Draw: (typ)			
Analog Models	10 W	10 W	46 W[8]
Ethernet Models	14 W	14 W	50 W[8]

8 Add 16 W if using VG4-SHTR-XT kit.

Surge Suppression

Protection on Video	Peak current 10 kA (Gas Tube Arrester), peak power 1000 W (10/1000 µ)
Protection on RS-232/485, Biphase	Peak current 10 A, peak power 300 W (8/20 µ)
Protection on Alarm Inputs	Peak current 17 A, peak power 300 W (8/20 µ)
Protection on Alarm Outputs	Peak current 2 A, peak power 300 W (8/20 µ)
Protection on Relay Outputs	Peak current 7.3 A, peak power 600 W (10/1000 µ)
Protection on Power Input (Dome)	Peak current 7.3 A, peak power 600 W (10/1000 µ)
Protection on Power Output (Arm Power Supply)	Peak current 21.4 A, peak power 1500 W (10/1000 µ)

Environmental

Model	**In-Ceiling**	**Indoor Pendant**	**EnviroDome®**
Design Rating	Plenum Rated	IP66	IP66
Operating Temp.	–10°C to 50°C (14°F to 122°F)	–10°C to 50°C (14°F to 122°F)	–40°C to 50°C (–40°F to 122°F)
Storage Temp.	–40°C to 60°C (–40°F to 140°F)	–40°C to 60°C (–40°F to 140°F)	–40°C to 60°C (–40°F to 140°F)
Humidity	0% to 90% relative, non-condensing	0% to 90% relative, non-condensing	0% to 100% relative, condensing
Protection	IP 66, IK 8 (IEC 62262)		

Miscellaneous

Sectors/Titling	16 independent sectors with 16-character titles/sector
Camera Setup/ Control	Biphase, RS-232, RS-485, Bilinx[8] (coax)
Communications Protocols	Biphase, Bilinx[9], Pelco P, and Pelco D
Pre-positions	99, each with 16-character titles
Guard Tours	Two (2) types of tours: • Recorded tours - two (2), total duration 15 minutes • Preset tour - one (1), consisting of up to 99 scenes, consecutively and (1) customized up to 99 scenes
Supported Languages	Czech, Dutch, English, French, German, Italian, Polish, Portuguese, Russian and Spanish

9 Bilinx not available on Ethernet models.

Cable Compensation

Max Distance	With Pre-comp OFF	With Pre-comp ON
RG-59/U	1000 ft (300 m)	2000 ft (600 m)
RG-6/U	1500 ft (450 m)	3000 ft (900 m)
RG-11/U	2000 ft (600 m)	4000 ft (1200 m)
Cat5/UTP (Passive receiver)	750 ft (225 m)	1500 ft (450 m)

User Connections

Power (Camera)	21-30 VAC, 50/60 Hz
Power (Heater)	21-30 VAC, 50/60 Hz
Biphase ±	Control Data
Audio Line In[10]	9 K Ohm typ, 5.5 Vp-p max
RS-232 RX/TX or RS-485 ± - optional control data (dip switch selectable)	
Video	BNC/UTP[11]
EOLR Alarm Inputs (2)	Programmable for "normally open", "normally closed", "normally open-supervised", "normally closed-supervised"
Alarm Inputs (5)	Programmable for "normally open" or "normally closed"
Relay Out (1)	Dry contact output rating: 2 A @ 30 VAC
Open Collector Outputs (3)	32VDC@150 ma max

10 With Ethernet models, the biphase ± can optionally be used as the audio line in connector.

11 Ethernet models have no UTP analog output only BNC (coax).

Mounts/Accessories

Pendant Mounts	
Arm Mounts	
Wall Arm (No Transformer)	VG4-A-PA0
Wall Arm (120/230 VAC Transformer)	VG4-A-PA1 / VG4-A-PA2
Wall Arm (120/230 VAC Transformer and Fiber Optics)	VG4-A-PA1F / VG4-A-PA2F
Optional Mounting Plates for Arm Mounts	
Corner Mounting Plate	VG4-A-9542
Mast (Pole) Mounting Plate	VG4-A-9541
Pipe Mounts	
Pipe Mount Cap	VG4-A-9543
Roof Mounts	
Roof (Parapet) Mount	VG4-A-9230
Optional Mounting Plates for Roof Mounts	
Flat Roof Adapter for Parapet Mount	LTC 9230/01
Power Supplies	
Outdoor Power Supply Box (120/230 VAC Transformer)	VG4-A-PSU1 / VG4-A-PSU2
Outdoor Power Supply Box (120/230 VAC Transformer and Fiber Optics)	VG4-A-PSU1F / VG4-A-PSU2F
Extended temp heater module extends temperature range to −60°C (−76°F) for EnviroDome® only	VG4-SHTR-XT

Fiber Optic Models

Optical Fiber Compatibility	50/125 mm, 62.5/125 mm, low loss multimode glass fiber, rated for a minimum system bandwidth of 20 MHz (video 850 nm/Control 1300 nm)
Max Distance	4 km (2.5 miles)

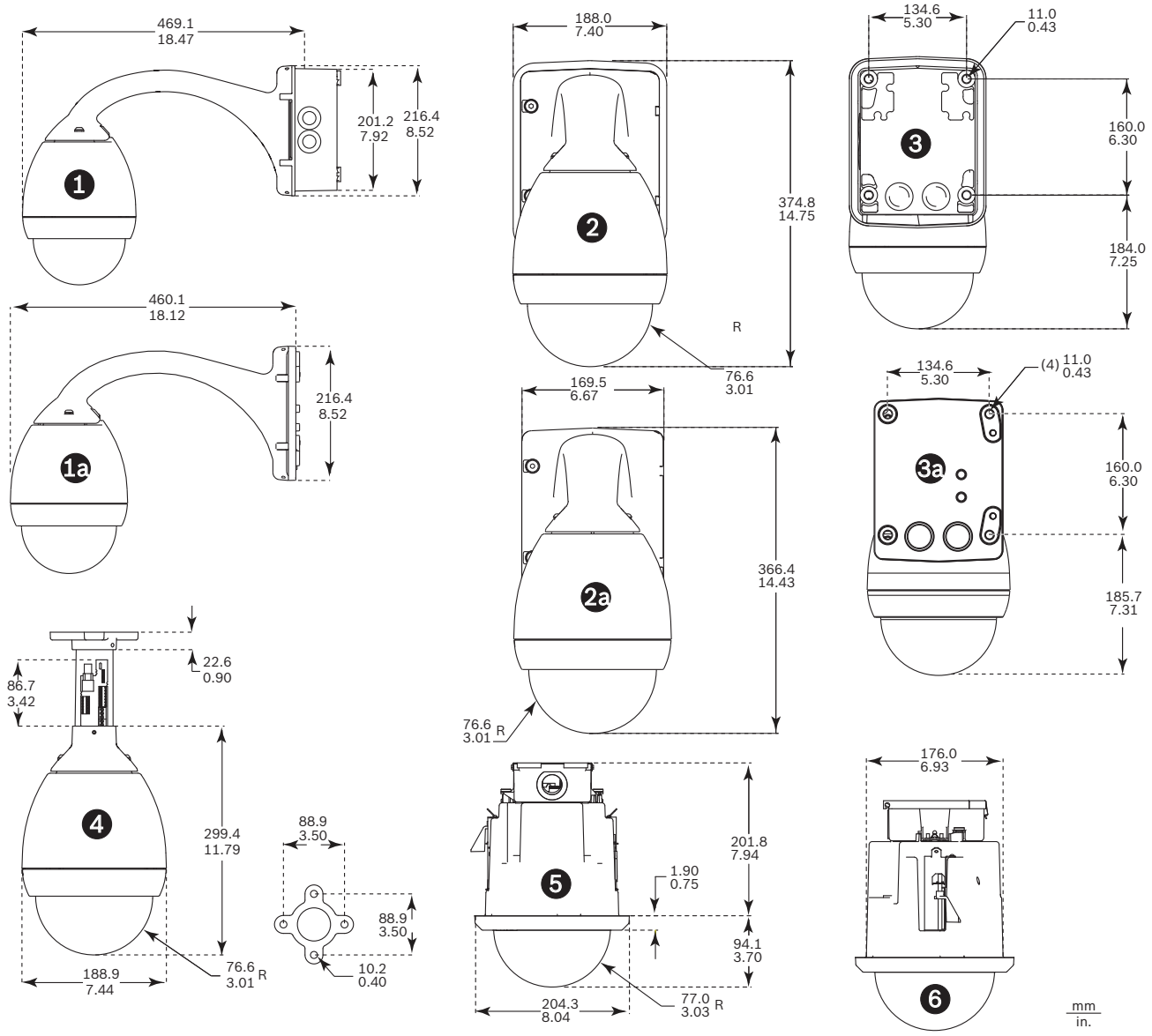

Indoor System Dimensions

Reference	Description
1	Wall Mount – Side with power supply and trim skirt removed
1a	Wall/Mast Mount – Side with VG4-ARMPLATE
2	Wall Mount – Front with power supply and trim skirt
2a	Wall Mount – Front with power supply
3	Wall Mount – Back with power supply and trim skirt
3a	Wall Mount – Back with power supply
4	Pipe Mount
5	In-ceiling Mount – Front
6	In-ceiling Mount – Side

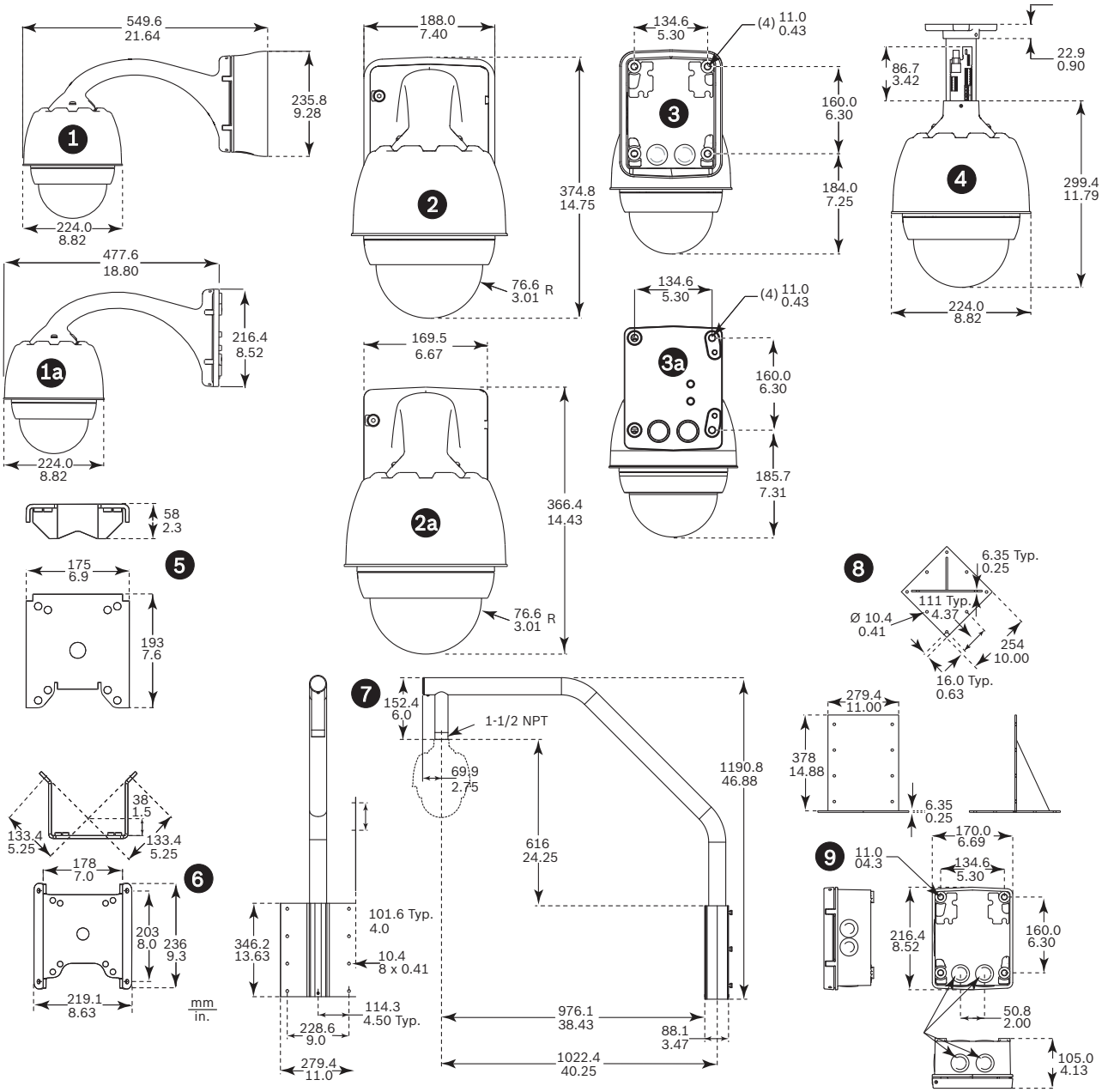

Outdoor System Dimensions

Reference	Description
1	Wall Mount – Side with power supply and trim skirt
1a	Wall/Mast Mount – Side with VG4-ARMPLATE
2	Wall Mount – Front with power supply and trim skirt
2a	Wall Mount – Front with power supply
3	Wall Mount – Back with power supply and trim skirt
3a	Wall Mount – Back with power supply
4	Pipe Mount
5	Mast Mount
6	Corner Mount
7	Roof Mount

Reference	Description
8	Roof Mount Adapter
9	Power Supply for Pipe and Roof Mounts

Ordering Information

AutoDome® 300 Series PTZ Camera System Contact your Bosch Security Systems, Inc. representative for complete ordering information.	**VG4-300**
For more information Please contact your local Bosch Sales office.	**Ordering Information**
VG4-322-CCE AutoDome 300 Series 18X Day/Night NTSC IP In-ceiling Camera, Clear bubble	**VG4-322-CCE**
VG4-322-CTE AutoDome 300 Series 18X Day/Night NTSC IP In-ceiling Camera, Tinted bubble	**VG4-322-CTE**
VG4-322-PCE AutoDome 300 Series 18X Day/Night NTSC IP Indoor Pendant Camera, Clear bubble	**VG4-322-PCE**
VG4-322-PTE AutoDome 300 Series 18X Day/Night NTSC IP Indoor Pendant Camera, Tinted bubble	**VG4-322-PTE**
VG4-322-ECE AutoDome 300 Series 18X Day/Night NTSC IP Outdoor Pendant Camera, Clear bubble	**VG4-322-ECE**
VG4-322-ETE AutoDome 300 Series 18X Day/Night NTSC IP Outdoor Pendant Camera, Tinted bubble	**VG4-322-ETE**
VG4-323-CCE AutoDome 300 Series 28X Day/Night NTSC IP In-ceiling Camera, Clear bubble	**VG4-323-CCE**
VG4-323-CTE AutoDome 300 Series 28X Day/Night NTSC IP In-ceiling Camera, Tinted bubble	**VG4-323-CTE**
VG4-323-PCE AutoDome 300 Series 28X Day/Night NTSC IP Indoor Pendant Camera, Clear bubble	**VG4-323-PCE**
VG4-323-PTE AutoDome 300 Series 28X Day/Night NTSC IP Indoor Pendant Camera, Tinted bubble	**VG4-323-PTE**
VG4-323-ECE AutoDome 300 Series 28X Day/Night NTSC IP Outdoor Pendant Camera, Clear bubble	**VG4-323-ECE**
VG4-323-ETE AutoDome 300 Series 28X Day/Night NTSC IP Outdoor Pendant Camera, Tinted bubble	**VG4-323-ETE**
VG4-324-CCE AutoDome 300 Series 36X Day/Night NTSC IP In-ceiling Camera, Clear bubble	**VG4-324-CCE**
VG4-324-CTE AutoDome 300 Series 36X Day/Night NTSC IP In-ceiling Camera, Tinted bubble	**VG4-324-CTE**
VG4-324-PCE AutoDome 300 Series 36X Day/Night NTSC IP Indoor Pendant, Clear bubble	**VG4-324-PCE**

Ordering Information

VG4-324-ECE AutoDome 300 Series 36X Day/Night NTSC IP Environmental Camera, Clear bubble	**VG4-324-ECE**
VG4-324-ETE AutoDome 300 Series 36X Day/Night NTSC IP Environmental Camera, Tinted bubble	**VG4-324-ETE**
VG4-324-PTE AutoDome 300 Series 36X Day/Night NTSC Indoor Pendant Tinted IP 300 Series 36X Day/Night NTSC Indoor Pendant Tinted IP	**VG4-324-PTE**
VG4313PTS AutoDome 300 Series PTZ Day/Night Analog PAL, 26x, indoor, tinted dome, without wall arm	**VG4-313-PTS**
VG4313PCS AutoDome 300 Series PTZ Day/Night Analog PAL, 26x, indoor, clear dome, without wall arm	**VG4-313-PCS**
VG4313ETS AutoDome 300 Series PTZ Day/Night Analog PAL, 26x, outdoor, tinted dome, without wall arm	**VG4-313-ETS**
VG4313ECS AutoDome 300 Series PTZ Day/Night Analog PAL, 26x, outdoor, clear dome, without wall arm	**VG4-313-ECS**
VG4313CTS AutoDome 300 Series PTZ Day/Night Analog PAL, 26x, in ceiling, tinted dome	**VG4-313-CTS**
VG4313CCS AutoDome 300 Series PTZ Day/Night Analog PAL, 26x, in ceiling, clear dome	**VG4-313-CCS**
VG4312PTS AutoDome 300 Series PTZ Day/Night Analog PAL, 18x, indoor, tinted dome, without wall arm	**VG4-312-PTS**
VG4312PCS AutoDome 300 Series PTZ Day/Night Analog PAL, 18x, indoor, clear dome, without wall arm	**VG4-312-PCS**
VG4312ETS AutoDome 300 Series PTZ Day/Night Analog PAL, 18x, outdoor, tinted dome, without wall arm	**VG4-312-ETS**
VG4312ECS AutoDome 300 Series PTZ Day/Night Analog PAL, 18x, outdoor, clear dome, without wall arm	**VG4-312-ECS**
VG4312CTS AutoDome 300 Series PTZ Day/Night Analog PAL, 18x, in ceiling, tinted dome	**VG4-312-CTS**
VG4312CCS AutoDome 300 Series PTZ Day/Night Analog PAL, 18x, in ceiling, clear dome	**VG4-312-CCS**

Ordering Information

VG4313PTS0W AutoDome 300 Series PTZ Day/Night Analog PAL, 26x, indoor, tinted dome, 24V, wall mounting	**VG4-313-PTS0W**
VG4313PCS0W AutoDome 300 Series PTZ Day/Night Analog PAL, 26x, indoor, clear dome, 24V, wall mounting	**VG4-313-PCS0W**
VG4313ETS0W AutoDome 300 Series PTZ Day/Night Analog PAL, 26x, outdoor, tinted dome, 24V, wall mounting	**VG4-313-ETS0W**
VG4312ECE0C AutoDome 300 Series PTZ Day/Night IP PAL, 18x, outdoor, clear dome, TCP/IP, 24V, corner mounting	**VG4-312-ECE0C**
VG4313PTE2W AutoDome 300 Series PTZ Day/Night IP PAL, 26x, indoor, tinted dome, TCP/IP, 230V, wall mounting	**VG4-313-PTE2W**
VG4313PCE2W AutoDome 300 Series PTZ Day/Night IP PAL, 26x, indoor, clear dome, TCP/IP, 230V, wall mounting	**VG4-313-PCE2W**
VG4313ETE2W AutoDome 300 Series PTZ Day/Night IP PAL, 26x, outdoor, tinted dome, TCP/IP, 230V, wall mounting	**VG4-313-ETE2W**
VG4313ECE2W AutoDome 300 Series PTZ Day/Night IP PAL, 26x, outdoor, clear dome, TCP/IP, 230V, wall mounting	**VG4-313-ECE2W**
VG4312PTE2W AutoDome 300 Series PTZ Day/Night IP PAL, 18x, indoor, tinted dome, TCP/IP, 230V, wall mounting	**VG4-312-PTE2W**
VG4312PCE2W AutoDome 300 Series PTZ Day/Night IP PAL, 18x, indoor, clear dome, TCP/IP, 230V, wall mounting	**VG4-312-PCE2W**
VG4312ETE2W AutoDome 300 Series PTZ Day/Night IP PAL, 18x, outdoor, tinted dome, TCP/IP, 230V, wall mounting	**VG4-312-ETE2W**
VG4312ECE2W AutoDome 300 Series PTZ Day/Night IP PAL, 18x, outdoor, clear dome, TCP/IP, 230V, wall mounting	**VG4-312-ECE2W**
VG4313ETE2R AutoDome 300 Series PTZ Day/Night IP PAL, 26x, outdoor, tinted dome, TCP/IP, 230V, roof mounting	**VG4-313-ETE2R**

Ordering Information

VG4313ECE2R AutoDome 300 Series PTZ Day/Night IP PAL, 26x, outdoor, clear dome, TCP/IP, 230V, roof mounting	**VG4-313-ECE2R**
VG4312ETE2R AutoDome 300 Series PTZ Day/Night IP PAL, 18x, outdoor, tinted dome, TCP/IP, 230V, roof mounting	**VG4-312-ETE2R**
VG4312ECE2R AutoDome 300 Series PTZ Day/Night IP PAL, 18x, outdoor, clear dome, TCP/IP, 230V, roof mounting	**VG4-312-ECE2R**
VG4313ETE2P AutoDome 300 Series PTZ Day/Night IP PAL, 26x, outdoor, tinted dome, TCP/IP, 230V, pipe mounting	**VG4-313-ETE2P**
VG4313ECE2P AutoDome 300 Series PTZ Day/Night IP PAL, 26x, outdoor, clear dome, TCP/IP, 230V, pipe mounting	**VG4-313-ECE2P**
VG4312ETE2P AutoDome 300 Series PTZ Day/Night IP PAL, 18x, outdoor, tinted dome, TCP/IP, 230V, pipe mounting	**VG4-312-ETE2P**
VG4312ECE2P AutoDome 300 Series PTZ Day/Night IP PAL, 18x, outdoor, clear dome, TCP/IP, 230V, pipe mounting	**VG4-312-ECE2P**
VG4313ETE2M AutoDome 300 Series PTZ Day/Night IP PAL, 26x, outdoor, tinted dome, TCP/IP, 230V, mast mounting	**VG4-313-ETE2M**
VG4313ECE2M AutoDome 300 Series PTZ Day/Night IP PAL, 26x, outdoor, clear dome, TCP/IP, 230V, mast mounting	**VG4-313-ECE2M**
VG4312ETE2M AutoDome 300 Series PTZ Day/Night IP PAL, 18x, outdoor, tinted dome, TCP/IP, 230V, mast mounting	**VG4-312-ETE2M**
VG4312ECE2M AutoDome 300 Series PTZ Day/Night IP PAL, 18x, outdoor, clear dome, TCP/IP, 230V, mast mounting	**VG4-312-ECE2M**
VG4313ETE2C AutoDome 300 Series PTZ Day/Night IP PAL, 26x, outdoor, clear dome, TCP/IP, 230V, corner mounting	**VG4-313-ETE2C**
VG4313ECE2C AutoDome 300 Series PTZ Day/Night IP PAL, 26x, outdoor, clear dome, TCP/IP, 230V, corner mounting	**VG4-313-ECE2C**

Ordering Information

VG4312ETE2C AutoDome 300 Series PTZ Day/Night IP PAL, 18x, outdoor, tinted dome, TCP/IP, 230V, corner mounting	**VG4-312-ETE2C**
VG4312ECE2C AutoDome 300 Series PTZ Day/Night IP PAL, 18x, outdoor, clear dome, TCP/IP, 230V, corner mounting	**VG4-312-ECE2C**
VG4313CCE AutoDome 300 Series PTZ Day/Night IP PAL, 26x, in ceiling, clear dome, TCP/IP	**VG4-313-CCE**
VG4312PTE AutoDome 300 Series PTZ Day/Night IP PAL, 18x, indoor, tinted dome, TCP/IP, without wall arm	**VG4-312-PTE**
VG4312PCE AutoDome 300 Series PTZ Day/Night IP PAL, 18x, indoor, clear dome, TCP/IP, without wall arm	**VG4-312-PCE**
VG4312ETE AutoDome 300 Series PTZ Day/Night IP PAL, 18x, outdoor, tinted dome, TCP/IP, without wall arm	**VG4-312-ETE**
VG4312ECE AutoDome 300 Series PTZ Day/Night IP PAL, 18x, outdoor, clear dome, TCP/IP, without wall arm	**VG4-312-ECE**
VG4312CTE AutoDome 300 Series PTZ Day/Night IP PAL, 18x, in ceiling, tinted dome, TCP/IP	**VG4-312-CTE**
VG4312CCE AutoDome 300 Series PTZ Day/Night IP PAL, 18x, in ceiling, clear dome, TCP/IP	**VG4-312-CCE**
VG4313PTE0W AutoDome 300 Series PTZ Day/Night IP PAL, 26x, indoor, tinted dome, TCP/IP, 24V, wall mounting	**VG4-313-PTE0W**
VG4313PCE0W AutoDome 300 Series PTZ Day/Night IP PAL, 26x, indoor, clear dome, TCP/IP, 24V, wall mounting	**VG4-313-PCE0W**
VG4313ETE0W AutoDome 300 Series PTZ Day/Night IP PAL, 26x, outdoor, tinted dome, TCP/IP, 24V, wall mounting	**VG4-313-ETE0W**
VG4313ECE0W AutoDome 300 Series PTZ Day/Night IP PAL, 26x, outdoor, clear dome, TCP/IP, 24V, wall mounting	**VG4-313-ECE0W**
VG4312PTE0W AutoDome 300 Series PTZ Day/Night IP PAL, 18x, indoor, tinted dome, TCP/IP, 24V, wall mounting	**VG4-312-PTE0W**

Ordering Information

VG4312PCE0W AutoDome 300 Series PTZ Day/Night IP PAL, 18x, indoor, clear dome, TCP/IP, 24V, wall mounting	**VG4-312-PCE0W**
VG4312ETE0W AutoDome 300 Series PTZ Day/Night IP PAL, 18x, outdoor, tinted dome, TCP/IP, 24V, wall mounting	**VG4-312-ETE0W**
VG4312ECE0W AutoDome 300 Series PTZ Day/Night IP PAL, 18x, outdoor, clear dome, TCP/IP, 24V, wall mounting	**VG4-312-ECE0W**
VG4313ETE0R AutoDome 300 Series PTZ Day/Night IP PAL, 26x, outdoor, tinted dome, TCP/IP, 24V, roof mounting	**VG4-313-ETE0R**
VG4313ECE0R AutoDome 300 Series PTZ Day/Night IP PAL, 26x, outdoor, clear dome, TCP/IP, 24V, roof mounting	**VG4-313-ECE0R**
VG4312ETE0R AutoDome 300 Series PTZ Day/Night IP PAL, 18x, outdoor, tinted dome, TCP/IP, 24V, roof mounting	**VG4-312-ETE0R**
VG4312ECE0R AutoDome 300 Series PTZ Day/Night IP PAL, 18x, outdoor, clear dome, TCP/IP, 24V, roof mounting	**VG4-312-ECE0R**
VG4313PTE0P AutoDome 300 Series PTZ Day/Night IP PAL, 26x, indoor, tinted dome, TCP/IP, 24V, pipe mounting	**VG4-313-PTE0P**
VG4313PCE0P AutoDome 300 Series PTZ Day/Night IP PAL, 26x, indoor, clear dome, TCP/IP, 24V, pipe mounting	**VG4-313-PCE0P**
VG4313ETE0P AutoDome 300 Series PTZ Day/Night IP PAL, 26x, outdoor, tinted dome, TCP/IP, 24V, pipe mounting	**VG4-313-ETE0P**
VG4313ECE0P AutoDome 300 Series PTZ Day/Night IP PAL, 26x, outdoor, clear dome, TCP/IP, 24V, pipe mounting	**VG4-313-ECE0P**
VG4312PCE0P AutoDome 300 Series PTZ Day/Night IP PAL, 18x, indoor, clear dome, TCP/IP, 24V, pipe mounting	**VG4-312-PCE0P**
VG4312ETE0P AutoDome 300 Series PTZ Day/Night IP PAL, 18x, outdoor, tinted dome, TCP/IP, 24V, pipe mounting	**VG4-312-ETE0P**

Ordering Information

VG4312ECE0P AutoDome 300 Series PTZ Day/Night IP PAL, 18x, outdoor, clear dome, TCP/IP, 24V, pipe mounting	**VG4-312-ECE0P**
VG4313ETE0M AutoDome 300 Series PTZ Day/Night IP PAL, 26x, outdoor, tinted dome, TCP/IP, 24V, mast mounting	**VG4-313-ETE0M**
VG4313ECE0M AutoDome 300 Series PTZ Day/Night IP PAL, 26x, outdoor, clear dome, TCP/IP, 24V, mast mounting	**VG4-313-ECE0M**
VG4312ETE0M AutoDome 300 Series PTZ Day/Night IP PAL, 18x, outdoor, tinted dome, TCP/IP, 24V, mast mounting	**VG4-312-ETE0M**
VG4312ECE0M AutoDome 300 Series PTZ Day/Night IP PAL, 18x, outdoor, clear dome, TCP/IP, 24V, mast mounting	**VG4-312-ECE0M**
VG4313ETE0C AutoDome 300 Series PTZ Day/Night IP PAL, 26x, outdoor, tinted dome, TCP/IP, 24V, corner mounting	**VG4-313-ETE0C**
VG4313ECE0C AutoDome 300 Series PTZ Day/Night IP PAL, 26x, outdoor, clear dome, TCP/IP, 24V, corner mounting	**VG4-313-ECE0C**
VG4312ETE0C AutoDome 300 Series PTZ Day/Night IP PAL, 18x, outdoor, tinted dome, TCP/IP, 24V, corner mounting	**VG4-312-ETE0C**
VG4312ETS0CF AutoDome 300 Series PTZ Day/Night Analog PAL, 18x, outdoor, tinted dome, 24V, corner mounting, optical fiber	**VG4-312-ETS0CF**
VG4312ECS0CF AutoDome 300 Series PTZ Day/Night Analog PAL, 18x, outdoor, clear dome, 24V, corner mounting, optical fiber	**VG4-312-ECS0CF**
VG4313PTS2WF AutoDome 300 Series PTZ Day/Night Analog PAL, 26x, indoor, tinted dome, 230V, wall mounting, optical fiber	**VG4-313-PTS2WF**
VG4313PCS2WF AutoDome 300 Series PTZ Day/Night Analog PAL, 26x, indoor, clear dome, 230V, wall mounting, optical fiber	**VG4-313-PCS2WF**
VG4313ETS2WF AutoDome 300 Series PTZ Day/Night Analog PAL, 26x, outdoor, tinted dome, 230V, wall mounting, optical fiber	**VG4-313-ETS2WF**

Ordering Information

VG4313ECS2WF AutoDome 300 Series PTZ Day/Night Analog PAL, 26x, outdoor, clear dome, 230V, wall mounting, optical fiber	**VG4-313-ECS2WF**
VG4312PTS2WF AutoDome 300 Series PTZ Day/Night Analog PAL, 18x, indoor, tinted dome, 230V, wall mounting, optical fiber	**VG4-312-PTS2WF**
VG4312PCS2WF AutoDome 300 Series PTZ Day/Night Analog PAL, 18x, indoor, clear dome, 230V, wall mounting, optical fiber	**VG4-312-PCS2WF**
VG4312ETS2WF AutoDome 300 Series PTZ Day/Night Analog PAL, 18x, outdoor, tinted dome, 230V, wall mounting, optical fiber	**VG4-312-ETS2WF**
VG4312ECS2WF AutoDome 300 Series PTZ Day/Night Analog PAL, 18x, outdoor, clear dome, 230V, wall mounting, optical fiber	**VG4-312-ECS2WF**
VG4313ETS2RF AutoDome 300 Series PTZ Day/Night Analog PAL, 26x, outdoor, tinted dome, 230V, roof mounting, optical fiber	**VG4-313-ETS2RF**
VG4313ECS2RF AutoDome 300 Series PTZ Day/Night Analog PAL, 26x, outdoor, clear dome, 230V, roof mounting, optical fiber	**VG4-313-ECS2RF**
VG4312ETS2RF AutoDome 300 Series PTZ Day/Night Analog PAL, 18x, outdoor, tinted dome, 230V, roof mounting, optical fiber	**VG4-312-ETS2RF**
VG4312ECS2RF AutoDome 300 Series PTZ Day/Night Analog PAL, 18x, outdoor, clear dome, 230V, roof mounting, optical fiber	**VG4-312-ECS2RF**
VG4313ETS2PF AutoDome 300 Series PTZ Day/Night Analog PAL, 26x, outdoor, tinted dome, 230V, pipe mounting, optical fiber	**VG4-313-ETS2PF**
VG4313ECS2PF AutoDome 300 Series PTZ Day/Night Analog PAL, 26x, outdoor, clear dome, 230V, pipe mounting, optical fiber	**VG4-313-ECS2PF**
VG4312ETS2PF AutoDome 300 Series PTZ Day/Night Analog PAL, 18x, outdoor, tinted dome, 230V, pipe mounting, optical fiber	**VG4-312-ETS2PF**
VG4312ECS2PF AutoDome 300 Series PTZ Day/Night Analog PAL, 18x, outdoor, clear dome, 230V, pipe mounting, optical fiber	**VG4-312-ECS2PF**

Ordering Information

VG4313ETS2MF AutoDome 300 Series PTZ Day/Night Analog PAL, 26x, outdoor, tinted dome, 230V, mast mounting, optical fiber	**VG4-313-ETS2MF**
VG4313ECS2MF AutoDome 300 Series PTZ Day/Night Analog PAL, 26x, outdoor, clear dome, 230V, mast mounting, optical fiber	**VG4-313-ECS2MF**
VG4312ETS2MF AutoDome 300 Series PTZ Day/Night Analog PAL, 18x, outdoor, tinted dome, 230V, mast mounting, optical fiber	**VG4-312-ETS2MF**
VG4312ECS2MF AutoDome 300 Series PTZ Day/Night Analog PAL, 18x, outdoor, clear dome, 230V, mast mounting, optical fiber	**VG4-312-ECS2MF**
VG4313ETS2CF AutoDome 300 Series PTZ Day/Night Analog PAL, 26x, outdoor, tinted dome, 230V, corner mounting, optical fiber	**VG4-313-ETS2CF**
VG4313ECS2CF AutoDome 300 Series PTZ Day/Night Analog PAL, 26x, outdoor, clear dome, 230V, corner mounting, optical fiber	**VG4-313-ECS2CF**
VG4312ETS2CF AutoDome 300 Series PTZ Day/Night Analog PAL, 18x, outdoor, tinted dome, 230V, corner mounting, optical fiber	**VG4-312-ETS2CF**
VG4312ECS2CF AutoDome 300 Series PTZ Day/Night Analog PAL, 18x, outdoor, clear dome, 230V, corner mounting, optical fiber	**VG4-312-ECS2CF**
VG4313PTE AutoDome 300 Series PTZ Day/Night IP PAL, 26x, indoor, tinted dome, TCP/IP, without wall arm	**VG4-313-PTE**
VG4313PCE AutoDome 300 Series PTZ Day/Night IP PAL, 26x, indoor, clear dome, TCP/IP, without wall arm	**VG4-313-PCE**
VG4313ETE AutoDome 300 Series PTZ Day/Night IP PAL, 26x, outdoor, tinted dome, TCP/IP, without wall arm	**VG4-313-ETE**
VG4313ECE AutoDome 300 Series PTZ Day/Night IP PAL, 26x, outdoor, clear dome, TCP/IP, without wall arm	**VG4-313-ECE**
VG4313CTE AutoDome 300 Series PTZ Day/Night IP PAL, 26x, in ceiling, tinted dome, TCP/IP	**VG4-313-CTE**
VG4313ECS0W AutoDome 300 Series PTZ Day/Night Analog PAL, 26x, outdoor, clear dome, 24V, wall mounting	**VG4-313-ECS0W**

Ordering Information

VG4312PTS0W AutoDome 300 Series PTZ Day/Night Analog PAL, 18x, indoor, tinted dome, 24V, wall mounting	**VG4-312-PTS0W**
VG4312PCS0W AutoDome 300 Series PTZ Day/Night Analog PAL, 18x, indoor, clear dome, 24V, wall mounting	**VG4-312-PCS0W**
VG4312ETS0W AutoDome 300 Series PTZ Day/Night Analog PAL, 18x, outdoor, tinted dome, 24V, wall mounting	**VG4-312-ETS0W**
VG4312ECS0W AutoDome 300 Series PTZ Day/Night Analog PAL, 18x, outdoor, clear dome, 24V, wall mounting	**VG4-312-ECS0W**
VG4313ETS0R AutoDome 300 Series PTZ Day/Night Analog PAL, 26x, outdoor, tinted dome, 24V, roof mounting	**VG4-313-ETS0R**
VG4313ECS0R AutoDome 300 Series PTZ Day/Night Analog PAL, 26x, outdoor, clear dome, 24V, roof mounting	**VG4-313-ECS0R**
VG4312ETS0R AutoDome 300 Series PTZ Day/Night Analog PAL, 18x, outdoor, tinted dome, 24V, roof mounting	**VG4-312-ETS0R**
VG4312ECS0R AutoDome 300 Series PTZ Day/Night Analog PAL, 18x, outdoor, clear dome, 24V, roof mounting	**VG4-312-ECS0R**
VG4313PTS0P AutoDome 300 Series PTZ Day/Night Analog PAL, 26x, indoor, tinted dome, 24V, pipe mounting	**VG4-313-PTS0P**
VG4313PCS0P AutoDome 300 Series PTZ Day/Night Analog PAL, 26x, indoor, clear dome, 24V, pipe mounting	**VG4-313-PCS0P**
VG4313ETS0P AutoDome 300 Series PTZ Day/Night Analog PAL, 26x, outdoor, tinted dome, 24V, pipe mounting	**VG4-313-ETS0P**
VG4313ECS0P AutoDome 300 Series PTZ Day/Night Analog PAL, 26x, outdoor, clear dome, 24V, pipe mounting	**VG4-313-ECS0P**
VG4312PTE0P AutoDome 300 Series PTZ Day/Night Analog PAL, 18x, indoor, tinted dome, TCP/IP, 24V, pipe mounting	**VG4-312-PTE0P**

Ordering Information

VG4312PTS0P AutoDome 300 Series PTZ Day/Night Analog PAL, 18x, indoor, tinted dome, 24V, pipe mounting	**VG4-312-PTS0P**
VG4312PCS0P AutoDome 300 Series PTZ Day/Night Analog PAL, 18x, indoor, clear dome, 24V, pipe mounting	**VG4-312-PCS0P**
VG4312ETS0P AutoDome 300 Series PTZ Day/Night Analog PAL, 18x, outdoor, tinted dome, 24V, pipe mounting	**VG4-312-ETS0P**
VG4312ECS0P AutoDome 300 Series PTZ Day/Night Analog PAL, 18x, outdoor, clear dome, 24V, pipe mounting	**VG4-312-ECS0P**
VG4313ETS0M AutoDome 300 Series PTZ Day/Night Analog PAL, 26x, outdoor, tinted dome, 24V, mast mounting	**VG4-313-ETS0M**
VG4313ECS0M AutoDome 300 Series PTZ Day/Night Analog PAL, 26x, outdoor, clear dome, 24V, mast mounting	**VG4-313-ECS0M**
VG4312ETS0M AutoDome 300 Series PTZ Day/Night Analog PAL, 18x, outdoor, tinted dome, 24V, mast mounting	**VG4-312-ETS0M**
VG4312ECS0M AutoDome 300 Series PTZ Day/Night Analog PAL, 18x, outdoor, clear dome, 24V, mast mounting	**VG4-312-ECS0M**
VG4313ETS0C AutoDome 300 Series PTZ Day/Night Analog PAL, 26x, outdoor, tinted dome, 24V, corner mounting	**VG4-313-ETS0C**
VG4313ECS0C AutoDome 300 Series PTZ Day/Night Analog PAL, 26x, outdoor, clear dome, 24V, corner mounting	**VG4-313-ECS0C**
VG4312ETS0C AutoDome 300 Series PTZ Day/Night Analog PAL, 18x, outdoor, tinted dome, 24V, corner mounting	**VG4-312-ETS0C**
VG4312ECS0C AutoDome 300 Series PTZ Day/Night Analog PAL, 18x, outdoor, clear dome, 24V, corner mounting	**VG4-312-ECS0C**
VG4313PTS2W AutoDome 300 Series PTZ Day/Night Analog PAL, 26x, indoor, tinted dome, 230V, wall mounting	**VG4-313-PTS2W**

Ordering Information

VG4313PCS2W AutoDome 300 Series PTZ Day/Night Analog PAL, 26x, indoor, clear dome, 230V, wall mounting	**VG4-313-PCS2W**
VG4313ETS2W AutoDome 300 Series PTZ Day/Night Analog PAL, 26x, outdoor, tinted dome, 230V, wall mounting	**VG4-313-ETS2W**
VG4313ECS2W AutoDome 300 Series PTZ Day/Night Analog PAL, 26x, outdoor, clear dome, 230V, wall mounting	**VG4-313-ECS2W**
VG4312PTS2W AutoDome 300 Series PTZ Day/Night Analog PAL, 18x, indoor, tinted dome, 230V, wall mounting	**VG4-312-PTS2W**
VG4312PCS2W AutoDome 300 Series PTZ Day/Night Analog PAL, 18x, indoor, clear dome, 230V, wall mounting	**VG4-312-PCS2W**
VG4312ETS2W AutoDome 300 Series PTZ Day/Night Analog PAL, 18x, outdoor, tinted dome, 230V, wall mounting	**VG4-312-ETS2W**
VG4312ECS2W AutoDome 300 Series PTZ Day/Night Analog PAL, 18x, outdoor, clear dome, 230V, wall mounting	**VG4-312-ECS2W**
VG4313ETS2R AutoDome 300 Series PTZ Day/Night Analog PAL, 26x, outdoor, tinted dome, 230V, roof mounting	**VG4-313-ETS2R**
VG4313ECS2R AutoDome 300 Series PTZ Day/Night Analog PAL, 26x, outdoor, clear dome, 230V, roof mounting	**VG4-313-ECS2R**
VG4312ETS2R AutoDome 300 Series PTZ Day/Night Analog PAL, 18x, outdoor, tinted dome, 230V, roof mounting	**VG4-312-ETS2R**
VG4312ECS2R AutoDome 300 Series PTZ Day/Night Analog PAL, 18x, outdoor, clear dome, 230V, roof mounting	**VG4-312-ECS2R**
VG4313ETS2P AutoDome 300 Series PTZ Day/Night Analog PAL, 26x, outdoor, tinted dome, 230V, pipe mounting	**VG4-313-ETS2P**
VG4313ECS2P AutoDome 300 Series PTZ Day/Night Analog PAL, 26x, outdoor, clear dome, 230V, pipe mounting	**VG4-313-ECS2P**

Ordering Information

VG4312ETS2P AutoDome 300 Series PTZ Day/Night Analog PAL, 18x, outdoor, tinted dome, 230V, pipe mounting	**VG4-312-ETS2P**
VG4312ECS2P AutoDome 300 Series PTZ Day/Night Analog PAL, 18x, outdoor, clear dome, 230V, pipe mounting	**VG4-312-ECS2P**
VG4313ETS2M AutoDome 300 Series PTZ Day/Night Analog PAL, 26x, outdoor, tinted dome, 230V, mast mounting	**VG4-313-ETS2M**
VG4313ECS2M AutoDome 300 Series PTZ Day/Night Analog PAL, 26x, outdoor, clear dome, 230V, mast mounting	**VG4-313-ECS2M**
VG4312ETS2M AutoDome 300 Series PTZ Day/Night Analog PAL, 18x, outdoor, tinted dome, 230V, mast mounting	**VG4-312-ETS2M**
VG4312ECS2M AutoDome 300 Series PTZ Day/Night Analog PAL, 18x, outdoor, clear dome, 230V, mast mounting	**VG4-312-ECS2M**
VG4313ETS2C AutoDome 300 Series PTZ Day/Night Analog PAL, 26x, outdoor, tinted dome, 230V, corner mounting	**VG4-313-ETS2C**
VG4313ECS2C AutoDome 300 Series PTZ Day/Night Analog PAL, 26x, outdoor, clear dome, 230V, corner mounting	**VG4-313-ECS2C**
VG4312ETS2C AutoDome 300 Series PTZ Day/Night Analog PAL, 18x, outdoor, tinted dome, 230V, corner mounting	**VG4-312-ETS2C**
VG4312ECS2C AutoDome 300 Series PTZ Day/Night Analog PAL, 18x, outdoor, clear dome, 230V, corner mounting	**VG4-312-ECS2C**
VG4313PTS0WF AutoDome 300 Series PTZ Day/Night Analog PAL, 26x, indoor, tinted dome, 24V, wall mounting, optical fiber	**VG4-313-PTS0WF**
VG4313PCS0WF AutoDome 300 Series PTZ Day/Night Analog PAL, 26x, indoor, clear dome, 24V, wall mounting, optical fiber	**VG4-313-PCS0WF**
VG4313ETS0WF AutoDome 300 Series PTZ Day/Night Analog PAL, 26x, outdoor, tinted dome, 24V, wall mounting, optical fiber	**VG4-313-ETS0WF**

Ordering Information

VG4313ECS0WF AutoDome 300 Series PTZ Day/Night Analog PAL, 26x, outdoor, clear dome, 24V, wall mounting, optical fiber	**VG4-313-ECS0WF**
VG4312PTS0WF AutoDome 300 Series PTZ Day/Night Analog PAL, 18x, indoor, tinted dome, 24V, wall mounting, optical fiber	**VG4-312-PTS0WF**
VG4312PCS0WF AutoDome 300 Series PTZ Day/Night Analog PAL, 18x, indoor, clear dome, 24V, wall mounting, optical fiber	**VG4-312-PCS0WF**
VG4312ETS0WF AutoDome 300 Series PTZ Day/Night Analog PAL, 18x, outdoor, tinted dome, 24V, wall mounting, optical fiber	**VG4-312-ETS0WF**
VG4312ECS0WF AutoDome 300 Series PTZ Day/Night Analog PAL, 18x, outdoor, clear dome, 24V, wall mounting, optical fiber	**VG4-312-ECS0WF**
VG4313ETS0RF AutoDome 300 Series PTZ Day/Night Analog PAL, 26x, outdoor, tinted dome, 24V, roof mounting, optical fiber	**VG4-313-ETS0RF**
VG4313ECS0RF AutoDome 300 Series PTZ Day/Night Analog PAL, 26x, outdoor, clear dome, 24V, roof mounting, optical fiber	**VG4-313-ECS0RF**
VG4312ETS0RF AutoDome 300 Series PTZ Day/Night Analog PAL, 18x, outdoor, tinted dome, 24V, roof mounting, optical fiber	**VG4-312-ETS0RF**
VG4312ECS0RF AutoDome 300 Series PTZ Day/Night Analog PAL, 18x, outdoor, clear dome, 24V, roof mounting, optical fiber	**VG4-312-ECS0RF**
VG4313ETS0PF AutoDome 300 Series PTZ Day/Night Analog PAL, 26x, outdoor, tinted dome, 24V, pipe mounting, optical fiber	**VG4-313-ETS0PF**
VG4313ECS0PF AutoDome 300 Series PTZ Day/Night Analog PAL, 26x, outdoor, clear dome, 24V, pipe mounting, optical fiber	**VG4-313-ECS0PF**
VG4312ETS0PF AutoDome 300 Series PTZ Day/Night Analog PAL, 18x, outdoor, tinted dome, 24V, pipe mounting, optical fiber	**VG4-312-ETS0PF**
VG4312ECS0PF AutoDome 300 Series PTZ Day/Night Analog PAL, 18x, outdoor, clear dome, 24V, pipe mounting, optical fiber	**VG4-312-ECS0PF**

Ordering Information

VG4313ETS0MF AutoDome 300 Series PTZ Day/Night Analog PAL, 26x, outdoor, tinted dome, 24V, mast mounting, optical fiber	**VG4-313-ETS0MF**
VG4313ECS0MF AutoDome 300 Series PTZ Day/Night Analog PAL, 26x, outdoor, clear dome, 24V, mast mounting, optical fiber	**VG4-313-ECS0MF**
VG4312ETS0MF AutoDome 300 Series PTZ Day/Night Analog PAL, 18x, outdoor, tinted dome, 24V, mast mounting, optical fiber	**VG4-312-ETS0MF**
VG4312ECS0MF AutoDome 300 Series PTZ Day/Night Analog PAL, 18x, outdoor, clear dome, 24V, mast mounting, optical fiber	**VG4-312-ECS0MF**
VG4313ETS0CF AutoDome 300 Series PTZ Day/Night Analog PAL, 26x, outdoor, tinted dome, 24V, corner mounting, optical fiber	**VG4-313-ETS0CF**
VG4313ECS0CF AutoDome 300 Series PTZ Day/Night Analog PAL, 26x, outdoor, clear dome, 24V, corner mounting, optical fiber	**VG4-313-ECS0CF**
VG4-324-CCE 300 Series 36X D/N, NTSC, in-ceiling, clear bubble, IP	**VG4-324-CCE**
VG4-314-CCE AutoDome 300 Series 36X Day/Night, PAL	**VG4-314-CCE**
VG4-314-CCS AutoDome 300 Series 36X Day/Night, PAL, analog in-ceiling with clear bubble	**VG4-314-CCS**
VG4-314-CTE AutoDome 300 Series 36X Day/Night, PAL, IP, in-ceiling, tinted bubble	**VG4-314-CTE**
VG4-314-CTS AutoDome 300 Series 36X Day/Night, PAL, analog, in-ceiling, tinted bubble	**VG4-314-CTS**
VG4-314-ECE AutoDome 300 Series 36X Day/Night, PAL, IP, environmental, clear bubble	**VG4-314-ECE**
VG4-314-ECE0C AutoDome 300 Series 24 VAC, 36X Day/Night, PAL, IP, corner, clear bubble	**VG43-314-ECE0C**
VG4-314-ECE0M AutoDome 300 Series 24 VAC, 36X Day/Night, PAL, IP, mast, clear bubble	**VG4-314-ECE0M**
VG4-314-ECE0P AutoDome 300 Series 24 VAC, 36X Day/Night, PAL, IP, pipe, clear bubble	**VG4-314-ECE0P**
VG4-314-ECE0R AutoDome 300 Series 24 VAC, 36X Day/Night, PAL, IP, roof, clear bubble	**VG4-314-ECE0R**

Ordering Information

VG4-3134-ECE0W AutoDome 300 Series 24 VAC, 36X Day/Night, PAL, IP, wall, clear bubble	**VG4-314-ECE0W**
VG4-314-ECE2C AutoDome 300 Series 230 VAC, 36X Day/Night, PAL, IP, corner, clear bubble	**VG4-314-ECE2C**
VG4-314-ECE2M AutoDome 300 Series 230 VAC, 36X Day/Night, PAL, IP, mast, clear bubble	**VG4-314-ECE2M**
VG4-314-ECE2P AutoDome 300 Series 230 VAC, 36X Day/Night, PAL, IP, pipe, clear bubble	**VG4-314-ECE2P**
VG4-314-ECE2R AutoDome 300 Series 230 VAC, 36X Day/Night, PAL, IP, roof, clear bubble	**VG4-314-ECE2R**
VG4-314-ECE2W AutoDome 300 Series 230 VAC, 36X Day/Night, PAL, IP, wall, clear bubble	**VG4-314-ECE2W**
VG4-314-ECS AutoDome 300 Series 36X Day/Night, PAL, clear bubble	**VG4-314-ECS**
VG4-314-ECS0C AutoDome 300 Series 24 VAC, 36X Day/Night, PAL, corner, clear bubble	**VG4-314-ECS0C**
VG4-314-ECS0CF AutoDome 300 Series 24 VAC, 36X Day/Night, PAL, fiber-optic, corner, clear bubble	**VG4-314-ECS0CF**
VG4-314-ECS0M AutoDome 300 Series 24 VAC, 36X Day/Night, PAL, mast, clear bubble	**VG4-314-ECS0M**
VG4-314-ECS0MF AutoDome 300 Series 24 VAC, 36X Day/Night, PAL, fiber-optic, mast, clear bubble	**VG4-314-ECS0MF**
VG4-314-ECS0P AutoDome 300 Series 24 VAC, 36X Day/Night, PAL, pipe, clear bubble	**VG4-314-ECS0P**
VG4-314-ECS0PF AutoDome 300 Series 24 VAC, 36X Day/Night, PAL, fiber-optic, pipe, clear bubble	**VG4-314-ECS0PF**
VG4-314-ECS0R AutoDome 300 Series 24 VAC, 36X Day/Night, PAL, roof, clear bubble	**VG4-314-ECS0R**
VG4-314-ECS0RF AutoDome 300 Series 24 VAC, 36X Day/Night, PAL, fiber-optic, roof, clear bubble	**VG4-314-ECS0RF**
VG4-314-ECS0W AutoDome 300 Series 24 VAC, 36X Day/Night, PAL, wall, clear bubble	**VG4-314-ECS0W**
VG4-314-ECS0WF AutoDome 300 Series 24 VAC, 36X Day/Night, PAL, fiber optic, wall, clear bubble	**VG4-314-ECS0WF**
VG4-314-ECS2C AutoDome 300 Series 230 VAC, 36X Day/Night, PAL, corner, clear bubble	**VG4-314-ECS2C**

Ordering Information

VG4-314-ECS2CF AutoDome 300 Series 230 VAC, 36X Day/Night, PAL, fiber-optic, corner, clear bubble	VG4-314-ECS2CF
VG4-314-ECS2M AutoDome 300 Series 230 VAC, 36X Day/Night, PAL, mast, clear bubble	VG4-314-ECS2M
VG4-314-ECS2MF AutoDome 300 Series 230 VAC, 36X Day/Night, PAL, fiber-optic, mast, clear bubble	VG4-314-ECS2MF
VG4-314-ECS2P AutoDome 300 Series 230 VAC, 36X Day/Night, PAL, pipe, clear bubble	VG4-314-ECS2P
VG4-314-ECS2PF AutoDome 300 Series 230 VAC, 36X Day/Night, PAL, fiber-optic, pipe, clear bubble	VG4-314-ECS2PF
VG4-314-ECS2R AutoDome 300 Series 230 VAC, 36X Day/Night, PAL, roof, clear bubble	VG4-314-ECS2R
VG4-314-ECS2RF AutoDome 300 Series 230 VAC, 36X Day/Night, PAL, fiber-optic, roof, clear bubble	VG4-314-ECS2RF
VG4-314-ECS2W AutoDome 300 Series 230 VAC, 36X Day/Night, PAL, wall, clear bubble	VG4-314-ECS2W
VG4-314-ECS2WF AutoDome 300 Series 230 VAC, 36X Day/Night, PAL, fiber-optic, wall, clear bubble	VG4-314-ECS2WF
VG4-314-ETE AutoDome 300 Series 24 VAC, 36X Day/Night, PAL, IP, tinted bubble	VG4-314-ETE
VG4-314-ETE0C AutoDome 300 Series 24 VAC, 36X Day/Night, PAL, IP, corner, tinted bubble	VG4-314-ETE0C
VG4-314-ETE0M AutoDome 300 Series 24 VAC, 36X Day/Night, PAL, IP, mast, tinted bubble	VG4-314-ETE0M
VG4-314-ETE0P AutoDome 300 Series 24 VAC, 36X Day/Night, PAL, IP, pipe, tinted bubble	VG4-314-ETE0P
VG4-314-ETE0R AutoDome 300 Series 24 VAC, 36X Day/Night, PAL, IP, roof, tinted bubble	VG4-314-ETE0R
VG4-314-ETE0W AutoDome 300 Series 24 VAC, 36X Day/Night, PAL, IP, wall, tinted bubble	VG4-314-ETE0W
VG4-314-ETE2C AutoDome 300 Series 230 VAC, 36X Day/Night, PAL, IP, corner, tinted bubble	VG4-314-ETE2C
VG4-314-ETE2M AutoDome 300 Series 230 VAC, 36X Day/Night, PAL, IP, mast, tinted bubble	VG4-314-ETE2M

Ordering Information

VG4-314-ETE2P AutoDome 300 Series 230 VAC, 36X Day/Night, PAL, IP, pipe, tinted bubble	VG4-314-ETE2P
VG4-314-ETE2R AutoDome 300 Series 230 VAC, 36X Day/Night, PAL, IP, roof, tinted bubble	VG4-314-ETE2R
VG4-314-ETE2W AutoDome 300 Series 230 VAC, 36X Day/Night, PAL, IP, wall, tinted bubble	VG4-314-ETE2W
VG4-314-ETS AutoDome 300 Series 36X Day/Night, PAL, tinted bubble	VG4-314-ETS
VG4-314-ETS0C AutoDome 300 Series 24 VAC, 36X Day/Night, PAL, corner, tinted bubble	VG4-314-ETS0C
VG4-314-ETS0CF AutoDome 300 Series 24 VAC, 36X Day/Night, PAL, fiber-optic, corner, tinted bubble	VG4-314-ETS0CF
VG4-314-ETS0M AutoDome 300 Series 24 VAC, 36X Day/Night, PAL, mast, tinted bubble	VG4-314-ETS0M
VG4-314-ETS0MF AutoDome 300 Series 24 VAC, 36X Day/Night, PAL, fiber-optic, mast, tinted bubble	VG4-314-ETS0MF
VG4-314-ETS0P AutoDome 300 Series 24 VAC, 36X Day/Night, PAL, pipe, tinted bubble	VG4-314-ETS0P
VG4-314-ETS0PF AutoDome 300 Series 24 VAC, 36X Day/Night, PAL, fiber-optic, pipe, tinted bubble	VG4-314-ETS0PF
VG4-314-ETS0R AutoDome 300 Series 24 VAC, 36X Day/Night, PAL, roof, tinted bubble	VG4-314-ETS0R
VG4-314-ETS0RF AutoDome 300 Series 24 VAC, 36X Day/Night, PAL, fiber-optic, roof, tinted bubble	VG4-314-ETS0RF
VG4-314-ETS0W AutoDome 300 Series 24 VAC, 36X Day/Night, PAL, wall, tinted bubble	VG4-314-ETS0W
VG4-314-ETS0WF AutoDome 300 Series 24 VAC, 36X Day/Night, PAL, fiber-optic, wall, tinted bubble	VG4-314-ETS0WF
VG4-314-ETS2C AutoDome 300 Series 230 VAC, 36X Day/Night, PAL, corner, tinted bubble	VG4-314-ETS2C
VG4-314-ETS2CF AutoDome 300 Series 230 VAC, 36X Day/Night, PAL, fiber-optic, corner, tinted bubble	VG4-314-ETS2CF
VG4-314-ETS2M AutoDome 300 Series 230 VAC, 36X Day/Night, PAL, mast, tinted bubble	VG4-314-ETS2M

Ordering Information

VG4-314-ETS2MF AutoDome 300 Series 230 VAC, 36X Day/Night, PAL, fiber-optic, mast, tinted bubble	**VG4-314-ETS2MF**
VG4-314-ETS2P AutoDome 300 Series 230 VAC, 36X Day/Night, PAL, pipe, tinted bubble	**VG4-314-ETS2P**
VG4-314-ETS2PF AutoDome 300 Series 230 VAC, 36X Day/Night, PAL, fiber-optic, pipe, tinted bubble	**VG4-314-ETS2PF**
VG4-314-ETS2R AutoDome 300 Series 230 VAC, 36X Day/Night, PAL, roof, tinted bubble	**VG4-314-ETS2R**
VG4-314-ETS2RF AutoDome 300 Series 230 VAC, 36X Day/Night, PAL, fiber-optic, roof, tinted bubble	**VG4-314-ETS2RF**
VG4-314-ETS2W AutoDome 300 Series 230 VAC, 36X Day/Night, PAL, wall, tinted bubble	**VG4-314-ETS2W**
VG4-314-ETS2WF AutoDome 300 Series 230 VAC, 36X Day/Night, PAL, fiber-optic, wall, tinted bubble	**VG4-314-ETS2WF**
VG4-314-PCE AutoDome 300 Series 36X Day/Night, PAL, IP, indoor pendant, clear bubble	**VG4-314-PCE**
VG4-314-PCE0P AutoDome 300 Series 24 VAC, 36X Day/Night, PAL, IP, pipe, indoor pendant, clear bubble	**VG4-314-PCE0P**
VG4-314-PCE0W AutoDome 300 Series 24 VAC, 36X Day/Night, PAL, IP, wall, indoor pendant, clear bubble	**VG4-314-PCE0W**
VG4-314-PCE2W AutoDome 300 Series 230 VAC, 36X Day/Night, PAL, IP, wall, indoor pendant, clear bubble	**VG4-314-PCE2W**
VG4-314-PCS AutoDome 300 Series 36X Day/Night, PAL, indoor pendant, clear bubble	**VG4-314-PCS**
VG4-314-PCS0P AutoDome 300 Series 24 VAC, 36X Day/Night, PAL, pipe, indoor pendant, clear bubble	**VG4-314-PCS0P**
VG4-314-PCS0W AutoDome 300 Series 24 VAC, 36X Day/Night, PAL, wall, indoor pendant, clear bubble	**VG4-314-PCS0W**
VG4-314-PCS0WF AutoDome 300 Series 24 VAC, 36X Day/Night, PAL, fiber-optic, wall, indoor pendant, clear bubble	**VG4-314-PCS0WF**
VG4-314-PCS2W AutoDome 300 Series 230 VAC, 36X Day/Night, PAL, wall, indoor pendant, clear bubble	**VG4-314-PCS2W**
VG4-314-PCS2WF AutoDome 300 Series 230 VAC, 36X Day/Night, PAL, fiber-optic, wall, indoor pendant, clear bubble	**VG4-314-PCS2WF**

Ordering Information

VG4-314-PTE AutoDome 300 Series 36X Day/Night, PAL, IP, indoor pendant, tinted bubble	**VG4-314-PTE**
VG4-314-PTE0P AutoDome 300 Series 24 VAC, 36X Day/Night, PAL, IP, pipe, indoor pendant, tinted bubble	**VG4-314-PTE0P**
VG4-314-PTE0W AutoDome 300 Series 24 VAC, 36X Day/Night, PAL, IP, wall, indoor pendant, tinted bubble	**VG4-314-PTE0W**
VG4-314-PTE2W AutoDome 300 Series 230 VAC, 36X Day/Night, PAL, IP, wall, indoor pendant, tinted bubble	**VG4-314-PTE2W**
VG4-314-PTS AutoDome 300 Series 36X Day/Night, PAL, indoor pendant, tinted bubble	**VG4-314-PTS**
VG4-314-PTS0P AutoDome 300 Series 24 VAC, 36X Day/Night, PAL, pipe, indoor pendant, tinted bubble	**VG4-314-PTS0P**
VG4-314-PTS0W AutoDome 300 Series 24 VAC, 36X Day/Night, PAL, wall, indoor pendant, tinted bubble	**VG4-314-PTS0W**
VG4-314-PTS0WF AutoDome 300 Series 24 VAC, 36X Day/Night, PAL, fiber-optic, wall, indoor pendant, tinted bubble	**VG4-314-PTS0WF**
VG4-314-PTS2W AutoDome 300 Series 230 VAC, 36X Day/Night, PAL, wall, indoor pendant	**VG4-314-PTS2W**
VG4-314-PTS2WF AutoDome 300 Series 230 VAC, 36X Day/Night, PAL, fiber-optic, wall, indoor pendant	**VG4-314-PTS2WF**
VG4-MCAM-24 PTZ, 36X Day/Night NTSC G4 CAM Module VG4-MCAM-24 PTZ, 36X Day/Night NTSC G4 CAM Module	**VG4-MCAM-24**
VG4-324-CCE 36X 300 Series Day/Night NTSC IP, In-ceiling Clear Bubble 36X 300 Series Day/Night NTSC IP, In-ceiling Clear Bubble	**VG4-324-CCE**
VG4-324-CCS 36X 300 Series Day/Night NTSC Analog, In-ceiling Clear Bubble 36X 300 Series Day/Night NTSC Analog, In-ceiling Clear Bubble	**VG4-324-CCS**
VG4-324-CTE 36X 300 Series Day/Night NTSC IP, In-ceiling Tinted Bubble 36X 300 Series Day/Night NTSC Analog, In-ceiling Tinted Bubble	**VG4-324-CTE**
VG4-324-CTS 36X 300 Series Day/Night NTSC Analog, In-ceiling Tinted Bubble 36X 300 Series Day/Night NTSC Analog, In-ceiling Tinted Bubble	**VG4-324-CTS**

Ordering Information

VG4-324-ECE 36X 300 Series Day/Night NTSC IP, ENV Clear Bubble 36X 300 Series Day/Night NTSC IP, ENV Clear Bubble	**VG4-324-ECE**
VG4-324-ECE0C 24 VAC, Corner Mount 36X 300 Series Day/Night NTSC IP, ENV Clear Bubble 24 VAC, Pendant Arm Corner Mount 300 Series Day/Night NTSC IP, ENV Clear Bubble	**VG4-324-ECE0C**
VG4-324-ECE0M 24 VAC, Mast Mount 36X 300 Series Day/Night NTSC IP, ENV Clear Bubble 24 VAC, Pendant Arm Mast Mount 36X 300 Series Day/Night NTSC IP, ENV Clear Bubble	**VG4-324-ECE0M**
VG4-324-ECE0P 24 VAC, Pipe Mount 36X 300 Series Day/Night NTSC IP, ENV Clear Bubble 24 VAC, Pendant NPT Pipe Mount 36X 300 Series Day/Night NTSC IP, ENV Clear Bubble	**VG4-324-ECE0P**
VG4-324-ECE0R 24 VAC, Roof Mount 36X 300 Series Day/Night NTSC IP, ENV Clear Bubble 24 VAC, Pendant NPT Roof Mount 36X 300 Series Day/Night NTSC IP, ENV Clear Bubble	**VG4-324-ECE0R**
VG4-324-ECE0W 24 VAC, Wall Mount 36X 300 Series Day/Night NTSC IP, ENV Clear Bubble 24 VAC, Pendant Arm Wall Mount 36X 300 Series Day/Night NTSC IP, ENV Clear Bubble	**VG4-324-ECE0W**
VG4-324-ECE1C 120 VAC, Corner Mount 36X 300 Series Day/Night NTSC IP, ENV Clear Bubble 120 VAC, Pendant Arm Corner Mount 36X 300 Series Day/Night NTSC IP, ENV Clear Bubble	**VG4-324-ECE1C**
VG4-324-ECE1M 120 VAC, Mast Mount 36X 300 Series Day/Night NTSC IP, ENV Clear Bubble 120 VAC, Pendant Arm Mast Mount 36X 300 Series Day/Night NTSC IP, ENV Clear Bubble	**VG4-324-ECE1M**
VG4-324-ECE1P 120 VAC, Pipe Mount 36X 300 Series Day/Night NTSC IP, ENV Clear Bubble 120 VAC, Pendant NPT Pipe Mount 36X 300 Series Day/Night NTSC IP, ENV Clear Bubble	**VG4-324-ECE1P**
VG4-324-ECE1R 120 VAC, Roof Mount 36X 300 Series Day/Night NTSC IP, ENV Clear Bubble 120 VAC, Pendant NPT Roof Mount 36X 300 Series Day/Night NTSC IP, ENV Clear Bubble	**VG4-324-ECE1R**
VG4-324-ECE1W 120 VAC, Wall Mount 36X 300 Series Day/Night NTSC IP, ENV Clear Bubble 120 VAC, Pendant Arm Wall Mount 36X 300 Series Day/Night NTSC IP, ENV Clear Bubble	**VG4-324-ECE1W**

Ordering Information

VG4-324-ECS 36X 300 Series Day/Night NTSC Analog, ENV Clear Bubble 36X 300 Series Day/Night NTSC Analog, ENV Clear Bubble	**VG4-324-ECS**
VG4-324-ECS0C 36X 300 Series Day/Night NTSC Analog, ENV Clear Bubble 24VAC, Pendant Arm (Corner Mount) 36X 300 Series Day/Night NTSC Analog, ENV Clear Bubble	**VG4-324-ECS0C**
VG4-324-ECS0CF 36X 300 Series Day/Night NTSC Analog, ENV Clear Bubble 24VAC, Pendant Arm (Corner Mount) 36X 300 Series Day/Night NTSC Analog, ENV Clear Bubble with Fiber	**VG4-324-ECS0CF**
VG4-324-ECS0M 36X 300 Series Day/Night NTSC Analog, ENV Clear Bubble 24VAC, Pendant Arm (Mast Mount) 36X 300 Series Day/Night NTSC Analog, ENV Clear Bubble	**VG4-324-ECS0M**
VG4-324-ECS0MF 36X 300 Series Day/Night NTSC Analog, ENV Clear Bubble 24VAC, Pendant Arm (Mast Mount) 36X 300 Series Day/Night NTSC Analog, ENV Clear Bubble with Fiber	**VG4-324-ECS0MF**
VG4-324-ECS0P 36X 300 Series Day/Night NTSC Analog, ENV Clear Bubble 24VAC, Pendant NPT (Pipe Mount) 36X 300 Series Day/Night NTSC Analog, ENV Clear Bubble	**VG4-324-ECS0P**
VG4-324-ECS0PF 36X 300 Series Day/Night NTSC Analog, ENV Clear Bubble 24VAC, Pendant NPT (Pipe Mount) 36X 300 Series Day/Night NTSC Analog, ENV Clear Bubble with Fiber	**VG4-324-ECS0PF**
VG4-324-ECS0R 36X 300 Series Day/Night NTSC Analog, ENV Clear Bubble 24VAC, Pendant NPT (Roof Mount) 36X 300 Series Day/Night NTSC Analog, ENV Clear Bubble	**VG4-324-ECS0R**
VG4-324-ECS0RF 36X 300 Series Day/Night NTSC Analog, ENV Clear Bubble 24VAC, Pendant NPT (Roof Mount) 36X 300 Series Day/Night NTSC Analog, ENV Clear Bubble with Fiber	**VG4-324-ECS0RF**
VG4-324-ECS0W 36X 300 Series Day/Night NTSC Analog, ENV Clear Bubble 24VAC, Pendant Arm (Wall Mount) 36X 300 Series Day/Night NTSC Analog, ENV Clear Bubble	**VG4-324-ECS0W**
VG4-324-ECS0WF 36X 300 Series Day/Night NTSC Analog, ENV Clear Bubble 24VAC, Pendant Arm (Wall Mount) 36X 300 Series Day/Night NTSC Analog, ENV Clear Bubble with Fiber	**VG4-324-ECS0WF**

Ordering Information

VG4-324-ECS1C 300 Series 36X Day/Night NTSC ENV Clear Analog 120 VAC, Pendant Arm (Corner Mount) 300 Series 36X Day/Night NTSC ENV Clear Analog	**VG4-324-ECS1C**
VG4-324-ECS1CF 300 Series 36X Day/Night NTSC ENV Clear Analog 120 VAC, Pendant Arm (Corner Mount) 300 Series 36X Day/Night NTSC ENV Clear Analog with Fiber	**VG4-324-ECS1CF**
VG4-324-ECS1M 300 Series 36X Day/Night NTSC ENV Clear Analog 120 VAC, Pendant Arm (Mast Mount) 300 Series 36X Day/Night NTSC ENV Clear Analog	**VG4-324-ECS1M**
VG4-324-ECS1MF 300 Series 36X Day/Night NTSC ENV Clear Analog 120 VAC, Pendant Arm (Mast Mount) 300 Series 36X Day/Night NTSC ENV Clear Analog with Fiber	**VG4-324-ECS1MF**
VG4-324-ECS1P 300 Series 36X Day/Night NTSC ENV Clear Analog 120 VAC, Pendant NPT (Pipe Mount) 300 Series 36X Day/Night NTSC ENV Clear Analog	**VG4-324-ECS1P**
VG4-324-ECS1PF 300 Series 36X Day/Night NTSC ENV Clear Analog 120 VAC, Pendant NPT (Pipe Mount) 300 Series 36X Day/Night NTSC ENV Clear Analog with Fiber	**VG4-324-ECS1PF**
VG4-324-ECS1R 300 Series 36X Day/Night NTSC ENV Clear Analog 120 VAC, Pendant NPT (Roof Mount) 300 Series 36X Day/Night NTSC ENV Clear Analog	**VG4-324-ECS1R**
VG4-324-ECS1RF 300 Series 36X Day/Night NTSC ENV Clear Analog 120 VAC, Pendant NPT (Roof Mount) 300 Series 36X Day/Night NTSC ENV Clear Analog with Fiber	**VG4-324-ECS1RF**
VG4-324-ECS1W 300 Series 36X Day/Night NTSC ENV Clear Analog 120 VAC, Pendant Arm (Wall Mount) 300 Series 36X Day/Night NTSC ENV Clear Analog	**VG4-324-ECS1W**
VG4-324-ECS1WF 300 Series 36X Day/Night NTSC ENV Clear Analog 120 VAC, Pendant Arm (Wall Mount) 300 Series 36X Day/Night NTSC ENV Clear Analog with Fiber	**VG4-324-ECS1WF**
VG4-324-PCE 300 Series 36X Day/Night NTSC Indoor Pendant Clear IP 300 Series 36X Day/Night NTSC Indoor Pendant Clear IP	**VG4-324-PCE**
VG4-324-PCE0P 300 Series 36X Day/Night NTSC Indoor Pendant Clear IP 24 VAC, Pendant NPT (Pipe Mount) 300 Series 36X Day/Night NTSC Indoor Pendant Clear IP	**VG4-324-PCE0P**

Ordering Information

VG4-324-PCE0W 300 Series 36X Day/Night NTSC Indoor Pendant Clear IP 24 VAC, Pendant Arm (Wall Mount) 300 Series 36X Day/Night NTSC Indoor Pendant Clear IP	**VG4-324-PCE0W**
VG4-324-PCE1W 300 Series 36X Day/Night NTSC Indoor Pendant Clear IP 120 VAC, Pendant Arm (Wall Mount) 300 Series 36X Day/Night NTSC Indoor Pendant Clear IP	**VG4-324-PCE1W**
VG4-324-PTE0P 300 Series 36X Day/Night NTSC Indoor Pendant Tinted IP 24 VAC, Pendant NPT (Pipe Mount) 300 Series 36X Day/Night NTSC Indoor Pendant Tinted IP	**VG4-324-PTE0P**
VG4-324-PTE0W 300 Series 36X Day/Night NTSC Indoor Pendant Tinted IP 24 VAC, Pendant Arm (Wall Mount) 300 Series 36X Day/Night NTSC Indoor Pendant Tinted IP	**VG4-324-PTE0W**
VG4-324-PTE1W 300 Series 36X Day/Night NTSC Indoor Pendant Tinted IP 120 VAC, Pendant Arm (Wall Mount) 300 Series 36X Day/Night NTSC Indoor Pendant Tinted IP	**VG4-324-PTE1W**
VG4-324-PCS 300 Series 36X Day/Night NTSC Indoor Pendant Clear Analog 300 Series 36X Day/Night NTSC Indoor Pendant Clear Analog	**VG4-324-PCS**
VG4-324-PCS0P 300 Series 36X Day/Night NTSC Indoor Pendant Clear Analog 24 VAC, Pendant NPT (Pipe Mount) 300 Series 36X Day/Night NTSC Indoor Pendant Clear Analog	**VG4-324-PCS0P**
VG4-324-PCS0W 300 Series 36X Day/Night NTSC Indoor Pendant Clear Analog 24 VAC, Pendant Arm (Wall Mount) 300 Series 36X Day/Night NTSC Indoor Pendant Clear Analog	**VG4-324-PCS0W**
VG4-324-PCS0WF 300 Series 36X Day/Night NTSC Indoor Pendant Clear Analog 24 VAC, Pendant Arm (Wall Mount) 300 Series 36X Day/Night NTSC Indoor Pendant Clear Analog with Fiber	**VG4-324-PCS0WF**
VG4-324-PCS1W 300 Series 36X Day/Night NTSC Indoor Pendant Clear Analog 120 VAC, Pendant Arm (Wall Mount) 300 Series 36X Day/Night NTSC Indoor Pendant Clear Analog	**VG4-324-PCS1W**
VG4-324-PCS1WF 300 Series 36X Day/Night NTSC Indoor Pendant Clear Analog 120 VAC, Pendant Arm (Wall Mount) 300 Series 36X Day/Night NTSC Indoor Pendant Clear Analog with Fiber	**VG4-324-PCS1WF**
VG4-324-PCS 300 Series 36X Day/Night NTSC Indoor Clear Analog Pendant Dome 300 Series 36X Day/Night NTSC Indoor Clear Analog Pendant Dome	**VG4-324-PCS**

Ordering Information

VG4-324-PCS0P 300 Series 36X Day/Night NTSC Indoor Clear Analog Pendant Dome 24 VAC, Pendant NPT (Pipe Mount) 300 Series 36X Day/Night NTSC Indoor Clear Analog Pendant Dome	**VG4-324-PCS0P**
VG4-324-PCS0W 300 Series 36X Day/ Night NTSC Indoor Clear Analog Pendant Dome 24 VAC, Pendant Arm (Wall Mount) 300 Series 36X Day/Night NTSC Indoor Clear Analog Pendant Dome	**VG4-324-PCS0W**
VG4-324-PCS0WF 300 Series 36X Day/ Night NTSC Indoor Clear Analog Pendant Dome 24 VAC, Pendant Arm (Wall Mount) 300 Series 36X Day/Night NTSC Indoor Clear Analog Pendant Dome with Fiber	**VG4-324-PCS0WF**
VG4-324-PCS1W 300 Series 36X Day/ Night NTSC Indoor Clear Analog Pendant Dome 120 VAC, Pendant Arm (Wall Mount) 300 Series 36X Day/Night NTSC Indoor Clear Analog Pendant Dome	**VG4-324-PCS1W**
VG4-324-PCS1WF 300 Series 36X Day/ Night NTSC Indoor Clear Analog Pendant Dome 120 VAC, Pendant Arm (Wall Mount) 300 Series 36X Day/Night NTSC Indoor Clear Analog Pendant Dome with Fiber	**VG4-324-PCS1WF**
VG4-PTS 300 Series 36X Day/Night NTSC Indoor Tinted Analog Pendant Dome 300 Series 36X Day/Night NTSC Indoor Tinted Analog Pendant Dome	**VG4-PTS**
VG4-PTS0P 300 Series 36X Day/Night NTSC Indoor Tinted Analog Pendant Dome 24 VAC, Pendant NPT (Pipe Mount) 300 Series 36X Day/Night NTSC Indoor Tinted Analog Pendant Dome	**VG4-PTS0P**
VG4-PTS0W 300 Series 36X Day/Night NTSC Indoor Tinted Analog Pendant Dome 24 VAC, Pendant Arm (Wall Mount) 300 Series 36X Day/Night NTSC Indoor Tinted Analog Pendant Dome	**VG4-PTS0W**
VG4-PTS0WF 300 Series 36X Day/Night NTSC Indoor Tinted Analog Pendant Dome 24 VAC, Pendant Arm (Wall Mount) 300 Series 36X Day/Night NTSC Indoor Tinted Analog Pendant Dome with Fiber	**VG4-PTS0WF**
VG4-PTS1W 300 Series 36X Day/Night NTSC Indoor Tinted Analog Pendant Dome 120 VAC, Pendant Arm (Wall Mount) 300 Series 36X Day/Night NTSC Indoor Tinted Analog Pendant Dome	**VG4-PTS1W**

Ordering Information

VG4-PTS1WF 300 Series 36X Day/Night NTSC Indoor Tinted Analog Pendant Dome 120 VAC, Pendant Arm (Wall Mount) 300 Series 36X Day/Night NTSC Indoor Tinted Analog Pendant Dome with Fiber	**VG4-PTS1WF**
VG4-324-ETE 300 Series 36X Day/Night NTSC ENV Tinted IP Dome	**VG4-324-ETE**
VG4-324-ETE0C 300 Series 36X Day/Night NTSC ENV Tinted IP Dome 24 VAC, Pendant Arm (Corner Mount) 300 Series 36X Day/Night NTSC ENV Tinted IP Dome	**VG4-324-ETE0C**
VG4-324-ETE0M 300 Series 36X Day/Night NTSC ENV Tinted IP Dome 24 VAC, Pendant Arm (Mast Mount) 300 Series 36X Day/Night NTSC ENV Tinted IP Dome	**VG4-324-ETE0M**
VG4-324-ETE0P 300 Series 36X Day/Night NTSC ENV Tinted IP Dome 24 VAC, Pendant NPT (Pipe Mount) 300 Series 36X Day/Night NTSC ENV Tinted IP Dome	**VG4-324-ETE0P**
VG4-324-ETE0R 300 Series 36X Day/Night NTSC ENV Tinted IP Dome 24 VAC, Pendant NPT (Roof Mount) 300 Series 36X Day/Night NTSC ENV Tinted IP Dome	**VG4-324-ETE0R**
VG4-324-ETE0W 300 Series 36X Day/Night NTSC ENV Tinted IP Dome 24 VAC, Pendant Arm (Wall Mount) 300 Series 36X Day/Night NTSC ENV Tinted IP Dome	**VG4-324-ETE0W**
VG4-324-ETE1C 300 Series 36X Day/Night NTSC ENV Tinted IP Dome 120 VAC, Pendant Arm (Corner Mount) 300 Series 36X Day/Night NTSC ENV Tinted IP Dome	**VG4-324-ETE1C**
VG4-324-ETE1M 300 Series 36X Day/Night NTSC ENV Tinted IP Dome 120 VAC, Pendant Arm (Mast Mount) 300 Series 36X Day/Night NTSC ENV Tinted IP Dome	**VG4-324-ETE1M**
VG4-324-ETE1P 300 Series 36X Day/Night NTSC ENV Tinted IP Dome 120 VAC, Pendant NPT (Pipe Mount) 300 Series 36X Day/Night NTSC ENV Tinted IP Dome	**VG4-324-ETE1P**
VG4-324-ETE1R 300 Series 36X Day/Night NTSC ENV Tinted IP Dome 120 VAC, Pendant NPT (Roof Mount) 300 Series 36X Day/Night NTSC ENV Tinted IP Dome	**VG4-324-ETE1R**
VG4-324-ETE1W 300 Series 36X Day/Night NTSC ENV Tinted IP Dome 120 VAC, Pendant Arm (Wall Mount) 300 Series 36X Day/Night NTSC ENV Tinted IP Dome	**VG4-324-ETE1W**
VG4-324-ETS 300 Series 36X Day/Night NTSC ENV Tinted Analog Dome 300 Series 36X Day/Night NTSC ENV Tinted Analog Dome	**VG4-324-ETS**

Ordering Information

VG4-324-ETS0C 300 Series 36X Day/Night NTSC ENV Tinted Analog Dome 24 VAC, Pendant Arm (Corner Mount) 300 Series 36X Day/Night NTSC ENV Tinted Analog Dome	**VG4-324-ETS0C**
VG4-324-ETS0CF 300 Series 36X Day/ Night NTSC ENV Tinted Analog Dome 24 VAC, Pendant Arm (Corner Mount) 300 Series 36X Day/Night NTSC ENV Tinted Analog Dome with Fiber	**VG4-324-ETS0CF**
VG4-324-ETS0M 300 Series 36X Day/Night NTSC ENV Tinted Analog Dome 24 VAC, Pendant Arm (Mast Mount) 300 Series 36X Day/Night NTSC ENV Tinted Analog Dome	**VG4-324-ETS0M**
VG4-324-ETS0MF 300 Series 36X Day/ Night NTSC ENV Tinted Analog Dome 24 VAC, Pendant Arm (Mast Mount) 300 Series 36X Day/Night NTSC ENV Tinted Analog Dome with Fiber	**VG4-324-ETS0MF**
VG4-324-ETS0P 300 Series 36X Day/Night NTSC ENV Tinted Analog Dome 24 VAC, Pendant NPT (Pipe Mount) 300 Series 36X Day/Night NTSCENV Tinted Analog Dome	**VG4-324-ETS0P**
VG4-324-ETS0PF 300 Series 36X Day/ Night NTSC ENV Tinted Analog Dome 24 VAC, Pendant NPT (Pipe Mount) 300 Series 36X Day/Night NTSCENV Tinted Analog Dome with Fiber	**VG4-324-ETS0PF**
VG4-324-ETS0R 300 Series 36X Day/Night NTSC ENV Tinted Analog Dome 24 VAC, Pendant NPT (Roof Mount) 300 Series 36X Day/Night NTSC ENV Tinted Analog Dome	**VG4-324-ETS0R**
VG4-324-ETS0RF 300 Series 36X Day/ Night NTSC ENV Tinted Analog Dome 24 VAC, Pendant NPT (Roof Mount) 300 Series 36X Day/Night NTSC ENV Tinted Analog Dome with Fiber	**VG4-324-ETS0RF**
VG4-324-ETS0W 300 Series 36X Day/Night NTSC ENV Tinted Analog Dome 24 VAC, Pendant Arm (Wall Mount) 300 Series 36X Day/Night NTSC ENV Tinted Analog Dome	**VG4-324-ETS0W**
VG4-324-ETS0WF 300 Series 36X Day/ Night NTSC ENV Tinted Analog Dome 24 VAC, Pendant Arm (Wall Mount) 300 Series 36X Day/Night NTSC ENV Tinted Analog Dome with Fiber	**VG4-324-ETS0WF**
VG4-324-ETS1C 300 Series 36X Day/Night NTSC ENV Tinted Analog Dome 120 VAC, Pendant Arm (Corner Mount) 300 Series 36X Day/Night NTSC ENV Tinted Analog Dome	**VG4-324-ETS1C**

Ordering Information

VG4-324-ETS1CF 300 Series 36X Day/ Night NTSC ENV Tinted Analog Dome 120 VAC, Pendant Arm (Corner Mount) 300 Series 36X Day/Night NTSC ENV Tinted Analog Dome with Fiber	**VG4-324-ETS1CF**
VG4-324-ETS1M 300 Series 36X Day/Night NTSC ENV Tinted Analog Dome 120 VAC, Pendant Arm (Mast Mount) 300 Series 36X Day/Night NTSC ENV Tinted Analog Dome	**VG4-324-ETS1M**
VG4-324-ETS1MF 300 Series 36X Day/ Night NTSC ENV Tinted Analog Dome 120 VAC, Pendant Arm (Mast Mount) 300 Series 36X Day/Night NTSC ENV Tinted Analog Dome with Fiber	**VG4-324-ETS1MF**
VG4-324-ETS1P 300 Series 36X Day/Night NTSC ENV Tinted Analog Dome 120 VAC, Pendant NPT (Pipe Mount) 300 Series 36X Day/Night NTSC ENV Tinted Analog Dome	**VG4-324-ETS1P**
VG4-324-ETS1PF 300 Series 36X Day/ Night NTSC ENV Tinted Analog Dome 120 VAC, Pendant NPT (Pipe Mount) 300 Series 36X Day/Night NTSC ENV Tinted Analog Dome with Fiber	**VG4-324-ETS1PF**
VG4-324-ETS1R 300 Series 36X Day/Night NTSC ENV Tinted Analog Dome 120 VAC, Pendant NPT (Roof Mount) 300 Series 36X Day/Night NTSC ENV Tinted Analog Dome	**VG4-324-ETS1R**
VG4-324-ETS1RF 300 Series 36X Day/ Night NTSC ENV Tinted Analog Dome 120 VAC, Pendant NPT (Roof Mount) 300 Series 36X Day/Night NTSC ENV Tinted Analog Dome with Fiber	**VG4-324-ETS1RF**
VG4-324-ETS1W 300 Series 36X Day/Night NTSC ENV Tinted Analog Dome 120 VAC, Pendant Arm (Wall Mount) 300 Series 36X Day/Night NTSC ENV Tinted Analog Dome	**VG4-324-ETS1W**
VG4-324-ETS1W 300 Series 36X Day/Night NTSC ENV Tinted Analog Dome 120 VAC, Pendant Arm (Wall Mount) 300 Series 36X Day/Night NTSC ENV Tinted Analog Dome	**VG4-324-ETS1W**
Accessories	
VG4-MCAM-14 PTZ, 36X Day/Night, PAL, VG4 camera module	**VG4-MCAM-14**
Software Options	
VP-CFGSFT Bilinx Configuration Tool configuration software with USB adapter	**VP-CFGSFT**

Americas:
Bosch Security Systems, Inc.
130 Perinton Parkway
Fairport, New York, 14450, USA
Phone: +1 800 289 0096
Fax: +1 585 223 9180
security.sales@us.bosch.com
www.boschsecurity.us

Europe, Middle East, Africa:
Bosch Security Systems B.V.
P.O. Box 80002
5600 JB Eindhoven, The Netherlands
Phone: + 31 40 2577 284
Fax: +31 40 2577 330
emea.securitysystems@bosch.com
www.boschsecurity.com

Asia-Pacific:
Robert Bosch (SEA) Pte Ltd, Security Systems
11 Bishan Street 21
Singapore 573943
Phone: +65 6571 2600
Fax: +65 6571 2698
apr.securitysystems@bosch.com
www.boschsecurity.com

Represented by

© Bosch Security Systems Inc. 2010 | Data subject to change without notice
T3382518027 | Cur: en-US, V24, 22 Jun 2010