AV1145/AV2145

Arecont Vision
megapixel technology...
beyond imagination

1.3-Megapixel or Full HD 1080p @ 31fps H.264 IP MegaBall™ Camera

1.3MP MegaBall™ Color Series

AV1145-04-W	4mm Lens, Wall Mount
AV1145-3310-W	3.3–10mm Lens, Wall Mount
AV1145-04-D	4mm Lens, Dome
AV1145-3310-D	3.3–10mm Lens, Dome

1080p MegaBall™ Color Series

AV2145-04-W	4mm Lens, Wall Mount
AV2145-3310-W	3.3–10mm Lens, Wall Mount
AV2145-04-D	4mm Lens, Dome
AV2145-3310-D	3.3–10mm Lens, Dome

1.3MP MegaBall™ Day/Night Series

AV1145DN-04-W	4mm Lens, Wall Mount
AV1145DN-3310-W	3.3–10mm Lens, Wall Mount
AV1145DN-04-D	4mm Lens, Dome
AV1145DN-3310-D	3.3–10mm Lens, Dome

1080p MegaBall™ Day/Night Series

AV2145DN-04-W	4mm Lens, Wall Mount
AV2145DN-3310-W	3.3–10mm Lens, Wall Mount
AV2145DN-04-D	4mm Lens, Dome
AV2145DN-3310-D	3.3–10mm Lens, Dome

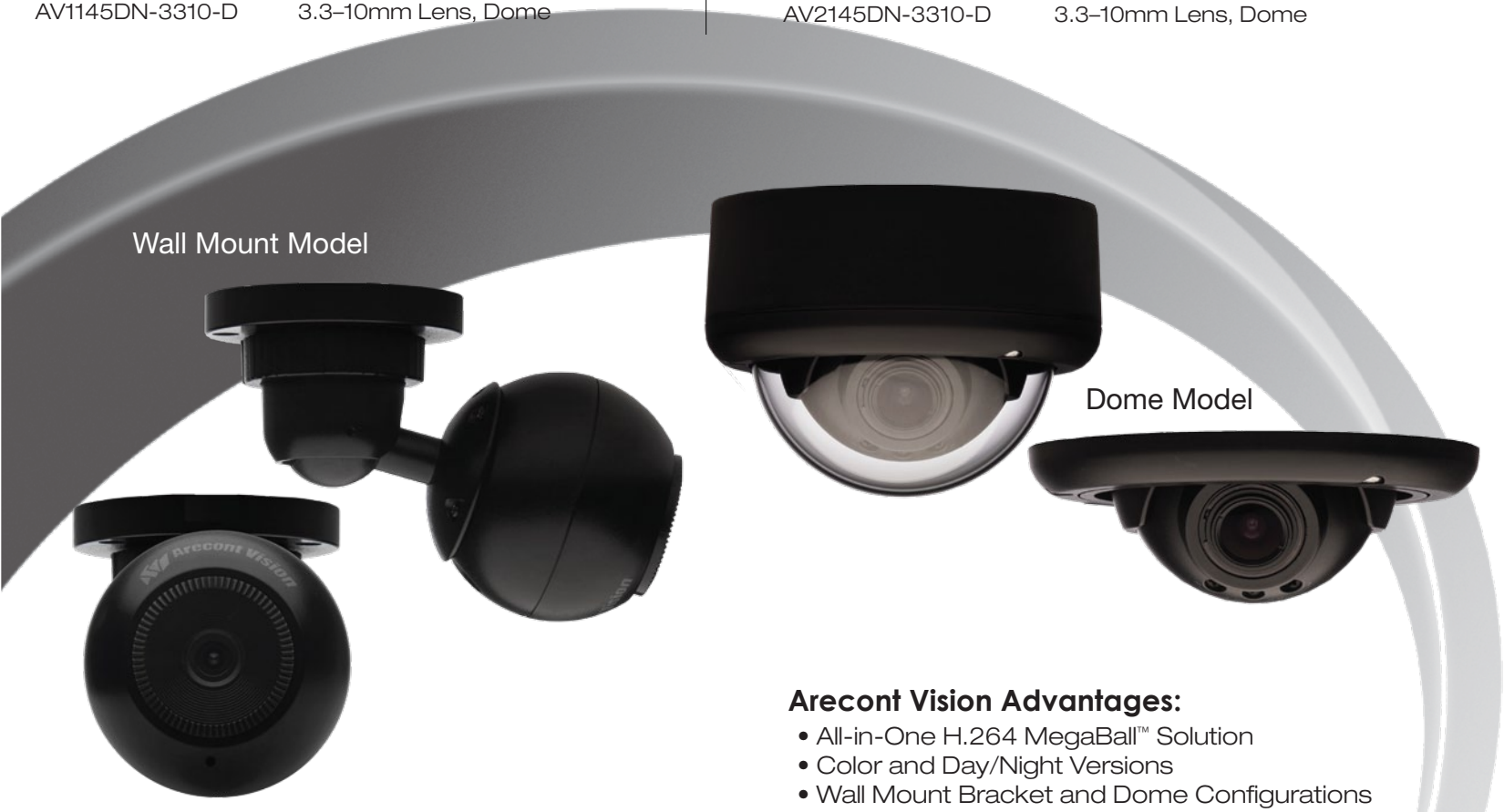

All-in-One Indoor 3" Ball Shape Solution:
Integrated H.264 Megapixel Camera,
3.3–10mm or 4mm Lens and
Wall Mount Bracket or Dome Solutions

Casino Mode™ (AV2145 Models)
Maintains 30fps

The Fastest Frame Rate on the Market:
31fps at 1080p Resolution, 42fps at 1.3MP

Addresses Cost-Sensitive H.264 Market

Arecont Vision Advantages:

- All-in-One H.264 MegaBall™ Solution
- Color and Day/Night Versions
- Wall Mount Bracket and Dome Configurations
- Fixed Focal and Varifocal Lens Options
- Dome Version Accommodates In-Ceiling and Surface Mounting
- Installer Friendly:
  - External Lens Adjustment
  - Cable Management
  - 3-Axis Adjustment
  - Bubble Options
- Dual Encoder H.264 (MPEG-4, Part 10) and MJPEG
- PSIA and ONVIF Conformant
- New User-Friendly Webpage
- 1024-Zone Motion Detection and Privacy Mask
- Bitrate Control, Multi-Streaming and Forensic Zooming
- PoE and Auxiliary Power: 12–48V DC/24V AC
- Casino Mode™ on AV2145 Models (Maintains 30fps)

PSIA ONVIF

Specification sheets subject to change without notice

Made in USA

CE c UL us

www.arecontvision.com avsales@arecontvision.com +1.818.937.0700 877.CAMERA.8

AV1145/AV2145

Model Numbers

AV1145-04-W	1.3MP Color, 4mm Lens, Wall Mount
AV1145-3310-W	1.3MP Color, 3.3–10mm Lens, Wall Mount
AV1145-04-D	1.3MP Color, 4mm Lens, Dome
AV1145-3310-D	1.3MP Color, 3.3–10mm Lens and Dome
AV1145DN-04-W	1.3MP D/N, 4mm Lens, Wall Mount
AV1145DN-3310-W	1.3MP D/N, 3.3–10mm Lens, Wall Mount
AV1145DN-04-D	1.3MP D/N, 4mm Lens, Dome
AV1145DN-3310-D	1.3MP D/N, 3.3–10mm Lens, Dome
AV2145-04-W	1080p Color, 4mm Lens, Wall Mount
AV2145-3310-W	1080p Color, 3.3–10mm Lens, Wall Mount
AV2145-04-D	1080p Color, 4mm Lens, Dome
AV2145-3310-D	1080p Color, 3.3–10mm Lens, Dome
AV2145DN-04-W	1080p D/N, 4mm Lens, Wall Mount
AV2145DN-3310-W	1080p D/N, 3.3–10mm Lens, Wall Mount
AV2145DN-04-D	1080p D/N, 4mm Lens, Dome
AV2145DN-3310-D	1080p D/N, 3.3–10mm Lens, Dome

Imaging

- 1.3-megapixel effective CMOS image sensor (AV1145)
- 2.07-megapixel CMOS image sensor (AV2145)
- Progressive Scan
- 1/2.7" optical format
- 3 µm pixel pitch
- Minimum illumination of:
  - Color (non-binned): 0.1 Lux
  - Day/Night: 0 Lux, IR sensitive
- Dynamic range 69 dB
- Maximum SNR 45 dB

Full Field-of-View (FOV) Resolution

Model Numbers	Full FOV Resolution	1/4 Resolution
AV1145	1280 (H) x 1024 (V)	640 (H) x 512 (V)
AV2145	1920 (H) x 1080 (V)	960 (H) x 540 (V)

Lens

- 4mm, F1.6 (–04 models):
  - H-FOV: 55° (AV1145)/82° (AV2145)
- 3.3–10mm, F1.6 (–3310 models):
  - H-FOV: 21–61° (AV1145)/31–90° (AV2145)

Cropped (FOV) Resolution

Flexible Cropping - Crop to 2 pixels in H.264 and 1 pixel in JPEG

- 1280x1024 1.3MP (AV2145)
- 1280x720 HDTV - 720p
- 640x480 VGA

Data Transmission

- Video frame rate up to:
  - 31fps at 1920x1080 (AV2145 only)
  - 42fps at 1280x1024
- Compression type:
  - H.264 (MPEG-4, Part 10)/Motion JPEG
  - 21 levels of quality
- RTSP, RTP/TCP, RTP/UDP, HTTP, TFTP transmission protocols
- 100Base-T Ethernet Network Interface
- Multi-streaming: 8 non-identical streams

Environmental

- Operating temperature -5°C (23°F) to +50°C (140°F)
- Stable image temperature 0°C (32°F) to +50°C (122°F)
- Storage temperature -20°C (-4°F) to +60°C (140°F)
- Humidity 0% to 90% (non-condensing)

Compliance Information

- Compliance:
  Class A FCC, Part 15; EN55022 Class A, EN55024, EN61000-3-2, EN61000-3-3, EN60950-1 RoHS, REACH
- CE Mark, UL Listed

Programmability

- Casino Mode™(AV2145) maintains 30fps
- Flexible cropping and low-light noise filter control
- Shutter Speed: 1ms – 500ms
- Backlight compensation and multi-matrix white balance
- On-camera motion detection and privacy mask w/1024 detection zones
- 50/60Hz selectable flicker control
- Electronic pan, tilt, zoom (PTZ) and image flip – 180° rotation
- MoonLight™ mode – extended exposure and proprietary noise cancellation
- Programmable resolution, brightness, saturation, gamma, sharpness, tint
- Bitrate and bandwith limitation control

Camera Electrical

- General purpose opto-isolated input and output
- Power over Ethernet (PoE): PoE 802.3af for camera
- Auxiliary power 12–48V DC, 24V AC
- Power consumption: 5.1 watts

Industry Standard

- PSIA and ONVIF Conformant

Mechanical

- Casing:
  - Die-casted aluminum 3" metal ball and bracket (–W models)
  - Plastic surface/in-ceiling dome w/polycarbonite bubble (–D models)
- Embedded in-ceiling mount (–D Models)
- External Lens adjustment for zoom, focus and iris (–3310 models)
- Easy 3-axis camera adjustment w/360° pan, 90° tilt and 360° z-axis
- Total Unit Dimensions:
  - Ø 3" (76.2mm) x 5.76" H (146.2mm) (–04-W models)
  - Ø 3" (76.2mm) x 6.15" H (156.2mm) (–3310-W models)
  - Ø 5.1" (130mm) x 1.74" H (44mm) (–D models in-ceiling)
  - Ø 5.1" (130mm) x 3.85" H (98mm) (–D models, surface w/bubble)
- Weight: 1.2lbs (0.54kg)

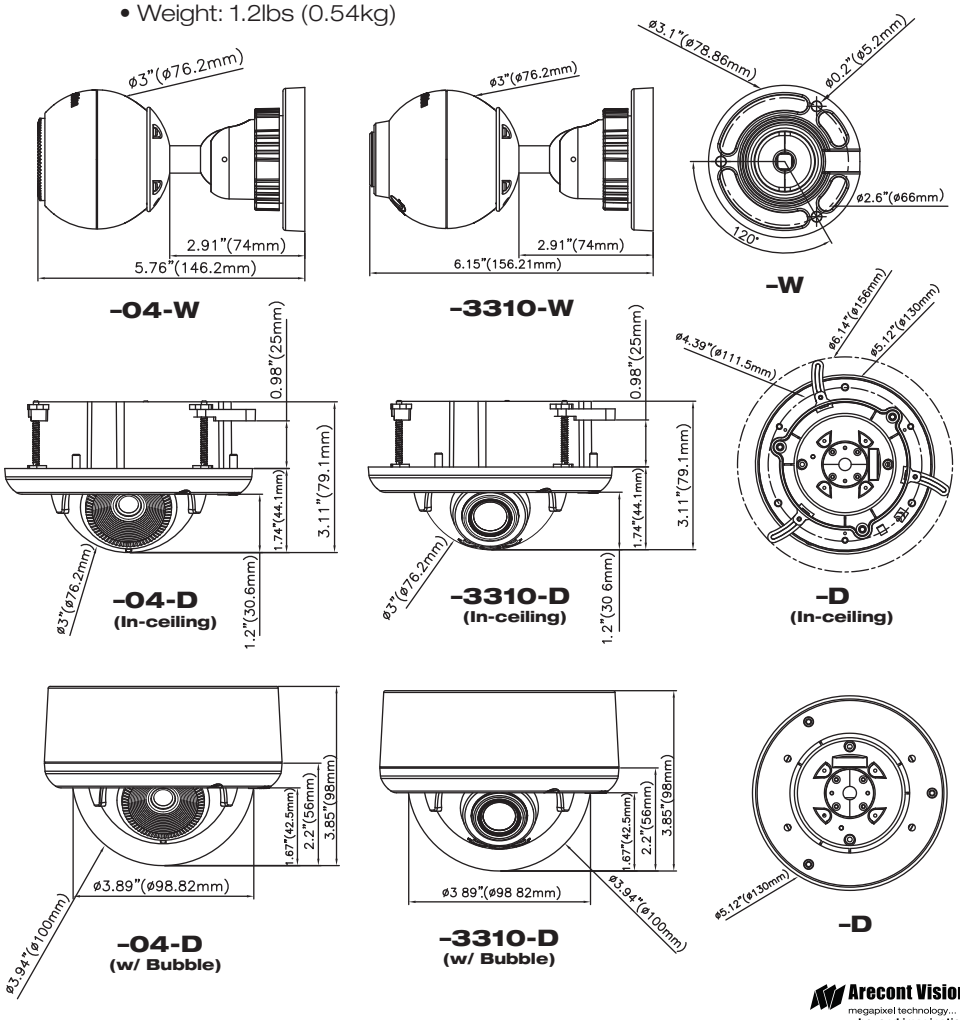

Specification sheets subject to change without notice

Revised 11.20.12

©2012 Arecont Vision

Arecont Vision
megapixel technology...
beyond imagination